INSTALLATION, COMMISSIONING AND SERVICING INSTRUCTIONS

WALL HUNG RSF GAS FIRED CONDENSING BOILER

Greenstar Ri ErP

FOR OPEN VENTED & SEALED CENTRAL HEATING SYSTEMS & INDIRECT MAINS FED DOMESTIC HOT WATER

672064744-00.1Wo

These appliances are for use with: Natural Gas or L.P.G. (Cat. II 2H 3P type C13, C33 & C53)		
	Model	**GC Number**
Natural Gas	12Ri ErP	41-406-41
	15Ri ErP	41-406-43
	18Ri ErP	41-406-45
	24Ri ErP	41-406-47
LPG	12Ri ErP	41-406-42
	15Ri ErP	41-406-44
	18Ri ErP	41-406-46
	24Ri ErP	41-406-48

If you smell gas:

- Well away from the building: call the National Gas Emergency Service on 0800 111 999.
- L.P.G. boilers: Call the supplier's number on the side of the gas tank.

WORCESTER
Bosch Group

6 720 813 283 (2014/09)

CONTENTS

1 KEY TO SYMBOLS AND SAFETY PRECAUTIONS 3
1.1 Key to symbols 3
1.2 Safety precautions 4

2 Regulations 5

3 APPLIANCE INFORMATION 6
3.1 Appliance 6
3.2 Technical data 7
3.3 Energy efficiency 8
3.4 Boiler main components 10

4 PRE-INSTALLATION 11
4.1 Cleaning primary systems 11
4.2 Mains supply 11
4.2.1 Electrical supply 11
4.2.2 Gas supply 11
4.3 Water systems and pipe work 11
4.4 Condensate pipe work 13
4.4.1 Internal connections 13
4.4.2 External connections 14
4.5 PRESSURE RELIEF PIPE WORK 15
4.6 Boiler location and clearances 15
4.6.1 Installation 15
4.6.2 Servicing clearances - Ventilated compartment 15
4.6.3 Compartments: 16
4.6.4 Boiler clearances- Unventilated compartments 16
4.6.5 Installation clearances - unventilated compartments 16
4.6.6 Bathrooms 16
4.7 Plumbing manifold 17
4.7.1 Connections 17
4.8 FLUE OPTIONS 18
4.8.1 Flue lengths 18
4.9 Flue terminal positions 20
4.10 Plume management terminal positions 21
4.10.1 Determine the plume management system length 22

5 INSTALLATION 22
5.1 Unpacking the wall frame & ancillary items 22
5.2 Wall mounting template & flue opening 23
5.3 Outer case removal 24
5.4 Boiler connection 24
5.4.1 Condensate connection 25
5.5 Flue turret/adaptor installation 26
5.6 Electrical connections 27

6 COMMISSIONING 28
6.1 Pre-Commissioning checks 28
6.2 Filling the system 29
6.3 Water treatment 29
6.4 Starting the appliance 29
6.5 Commissioning 30
6.5.1 Checking the gas inlet pressure 30
6.5.2 Checking the gas rate 31
6.6 CO and Combustion checks 31
6.7 Finishing commissioning 32
6.7.1 Replace the outer case: 32
6.7.2 Install the bottom panel 32
6.7.3 Hand over 32
6.7.4 Appliance guarantee 32

7 SERVICE AND SPARES 33
7.1 Inspection and service 33
7.2 Checking gas inlet pressure 34
7.3 Checking flue integrity 34
7.4 Fan pressure test 34
7.5 Flue gas analysis 35
7.6 Setting the air/gas ratio 36
7.6.1 Setting the CO/CO2 36
7.7 Cleaning the heat exchanger 36
7.7.1 Syphon removal and cleaning 38
7.8 Replacement of parts 39
7.8.1 Removing the outer casing 39
7.8.2 Primary sensor (CH NTC) 39
7.8.3 Overheat thermostat 39
7.8.4 Flue overheat thermostat (with grommet) 40
7.8.5 Lowering the boiler controls to the service position: 40
7.8.6 Gas valve 41
7.8.7 Air/gas manifold and fan assembly 41
7.8.8 Air pressure switch 42
7.8.9 Fan 42
7.8.10 Electrode assembly and burner 43
7.8.11 Re-assembly of the burner clamping plate 43
7.8.12 Heat exchanger 44
7.8.13 Syphon removal 45
7.8.14 Access to boiler control components 45
7.8.15 PCB Fuse 45
7.8.16 Code plug 45
7.8.17 Transformer/PCB 45
7.9 Short parts list 47

8 FAULT FINDING AND DIAGNOSIS 48
8.1 Fault finding 48
8.1.1 Internal wiring diagram 49
8.2 Boiler function 50
8.3 Protection function 51

1 KEY TO SYMBOLS AND SAFETY PRECAUTIONS

1.1 Key to symbols

Warnings

Warnings in this document are identified by a warning triangle printed against a grey background. Keywords at the start of a warning indicate the type and seriousness of the ensuing risk if measures to prevent the risk are not taken.

The following keywords are defined and can be used in this document:

- **NOTICE** indicates a situation that could result in damage to property or equipment.
- **CAUTION** indicates a situation that could result in minor to medium injury.
- **WARNING** indicates a situation that could result in severe injury or death.
- **DANGER** indicates a situation that will result in severe injury or death.

Important information

This symbol indicates important information where there is no risk to people or property.

Additional symbols

Symbol	Meaning
1.	a numbered step in an action sequence
▸	a step in an action sequence
→	a reference to a related part in the document or to other related documents
(1)	a reference number to identify or refer to a part or item
·	a list entry
–	a list entry (second level)

Table 1 Symbols

Examples of additional symbols used

A numbered step in an action sequence

A sequence of numbered steps or actions carried out in a specific order to complete a task.

1. First action
2. Second action
3. Third action
   etc.

A step in an action sequence

A sequence of defined actions or steps carried out in order to complete a task.

▶ Action
▶ Next action
▶ etc

A reference to a related part in the document or to other related documents.

To refer the reader to a specific figure/table/section within the manual.

→ e.g. figure 1.

A reference number to identify or refer to a part or item.

In a related figure, items or parts identified by a sequential number.

List entries, first and second levels

- A single component/item
- A component/list, made up of multiple parts/items.
  - Sub component or sublist of main component/list.
  - etc.

SYMBOLS USED IN THIS MANUAL

	Domestic Hot Water
	Central Heating
	Hot Water Storage Cylinder
	Domestic Cold Water Supply
	Electrical Supply
	Gas Supply

Table 2 Commonly used symbols

PLEASE READ THESE INSTRUCTIONS CAREFULLY BEFORE STARTING INSTALLATION.

These instructions are applicable to the Worcester appliance model(s) stated on the front cover of this manual only and must not be used with any other make or model of appliance.
These instructions apply in the UK and Ireland only and must be followed except for any statutory obligations.
This appliance must be installed and serviced by a **GAS SAFE** registered, competent person. Failure to install correctly could lead to prosecution.
If you are in any doubt, contact the Worcester Technical helpline (0330 123 3366).
Please leave these instructions with the completed BENCHMARK CHECKLIST, (or a certificate confirming compliance with IS 813, Eire only) and the user manual with the owner or at the gas meter after installation or servicing.
Distance learning and training courses are available from Worcester.
The BENCHMARK CHECKLIST can be found in the back of this Installation manual.

Ø	Diameter
NG	Natural Gas
LPG	Liquid Petroleum Gas
CH	Central Heating
DHW	Domestic Hot Water
DCW	Domestic Cold Water
DWTA	Domestic Water Treatment Association
PRV	Pressure Relief Valve
NTC	Negative Temperature Coefficient (sensor)
IP	Ingress Protection
RCD	Residual Current Device
TRV	Thermostatic Radiator Valve
ECV	Emergency Control Valve
WRAS	Water Regulations Advisory Scheme
SEDBUK	Seasonal Efficiency of Domestic Boilers in the United Kingdom

Table 3 Abbreviations use in this manual

1.2 Safety precautions

IF YOU SMELL GAS

A gas leak could potentially cause an explosion. If you smell gas, observe the following rules.

- ▶ Prevent flames or sparks:
  - – Do not smoke, use a lighter or strike matches.
  - – Do not operate any electrical switches or unplug any equipment.
  - – Do not use the telephone or ring doorbells.
- ▶ Turn off the gas at the meter or regulator.
- ▶ Open windows and doors.
- ▶ Warn your neighbours and leave the building.
- ▶ Prevent anyone from entering the building.
- ▶ Well away from the building: call the National Gas Emergency Service on 0800 111 999.
- ▶ L.P.G. boilers: Call the supplier's number on the side of the gas tank.

Appliance operation:

This appliance can be used by children aged from 8 years and above and persons with reduced physical, sensory or mental capabilities or lack of experience and knowledge, if they have been given supervision or instruction concerning the use of the appliance, in a safe way, and understand the hazards involved.
Children shall not play with the appliance.
Cleaning and user maintenance shall not be made by children without supervision.

benchmark COLLECTIVE MARK
THE MARK OF QUALITY FOR THE INSTALLATION, COMMISSIONING AND SERVICING OF DOMESTIC HEATING AND HOT WATER SYSTEMS

Benchmark places responsibilities on both manufacturers and installers.
The purpose is to ensure that customers are provided with the correct equipment for their needs, that it is installed, commissioned and serviced in accordance with the manufacturer's instructions by competent persons and that it meets the requirements of the appropriate Building Regulations. The Benchmark Checklist can be used to demonstrate compliance with Building Regulations and should be provided to the customer for future reference.

Installers are required to carry out installation, commissioning and servicing work in accordance with the Benchmark Code of Practice which is available from the Heating and Hotwater Industry Council who manage and promote the scheme.
Visit **centralheating.co.uk** for more information.

Health and safety

The appliance contains no asbestos and no substances have been used in the construction process that contravene the COSHH Regulations (Control of Substances Hazardous to Health Regulations 1988).

Combustion and corrosive materials

Do not store or use any combustible materials (paper, thinners, paints etc.) inside or within the vicinity of the appliance.

Chemically aggressive substances can corrode the appliance and invalidate any warranty.

Fittings and modifications

Fitting the appliance and any controls to the appliance may only be carried out by a competent engineer in accordance with the current Gas Safety (Installation and Use) Regulations.

Flue systems must not be modified in any way other than as described in the fitting instructions. Any misuse or unauthorised modifications to the appliance, flue or associated components and systems could invalidate the warranty. The manufacturer accepts no liability arising from any such actions, excluding statutory rights.

Servicing

Advise the user to have the system serviced annually by a competent, qualified Gas Safe registered engineer. Approved spares must be used to help maintain the economy, safety and reliability of the appliance.

Important

The service engineer must complete the Service Record on the Benchmark Checklist after each service.

Flue System

Condensfit II

Only use the approved Worcester Condensfit II flue system with this appliance.

Worcester original spare parts

Only use Worcester original spare parts with this appliance.
Non Worcester original spare parts will invalidate the guarantee (if applicable) and any warranty.

2 Regulations

Installation regulations

Current Gas Safety (Installation & Use) Regulations:

All gas appliances must be installed by a competent person in accordance with the above regulations.
Failure to install appliances correctly could lead to prosecution.

The appliance must be installed in accordance with, and comply to, the current: Gas Safety Regulations, IET Regulations, Building Regulations, Building Standards (Scotland) (Consolidation), Building Regulations (Northern Ireland), local water by-laws, Health & Safety Document 635 (The Electricity at Work Regulations 1989), EU Regulations No. 811/2013 - Energy Labelling and any other local requirements.

British standards

Where no specific instruction is given, reference should be made to the relevant British Standard codes of Practice.

BS7074:1 Code of practice for domestic and hot water supply

BS6891 Installation of low pressure gas pipe work up to 28mm (R1)

BS5546 Installation of gas hot water supplies for domestic purposes

EN12828 Central heating for domestic premises

BS5440:1 Flues and ventilation for gas appliances of rated heating not exceeding 70kW (net): Flues

BS5440:2 Flues and ventilation for gas appliances of rated heating not exceeding 70kW (net): Air Supply

BS7593 Treatment of water in domestic hot water central heating systems

BS6798 Installation of gas fired boilers of rated input up to 70kW (net)

L.P.G. Installations

An appliance using L.P.G. must not be installed in a room or internal space below ground level unless one side of the building is open to the ground.

Irish Standards

The relevant Irish standards should be followed, including:

- ECTI National rules for electrical installations
- IS 813:2002 for Domestic Gas Installations.

Timber Framed Buildings

Where the boiler is to be fitted to a timber framed building the guidelines laid down in BS5440: Part 1 and IGE "Gas Installations in Timber Frame Buildings" should be adhered to.

Potable Water

All seals, joints and compounds (including flux and solder) and components used as part of the secondary domestic water system must be approved by WRAS.

CH Water

Artificially softened water must not be used to fill the central heating system.

3 APPLIANCE INFORMATION

3.1 APPLIANCE

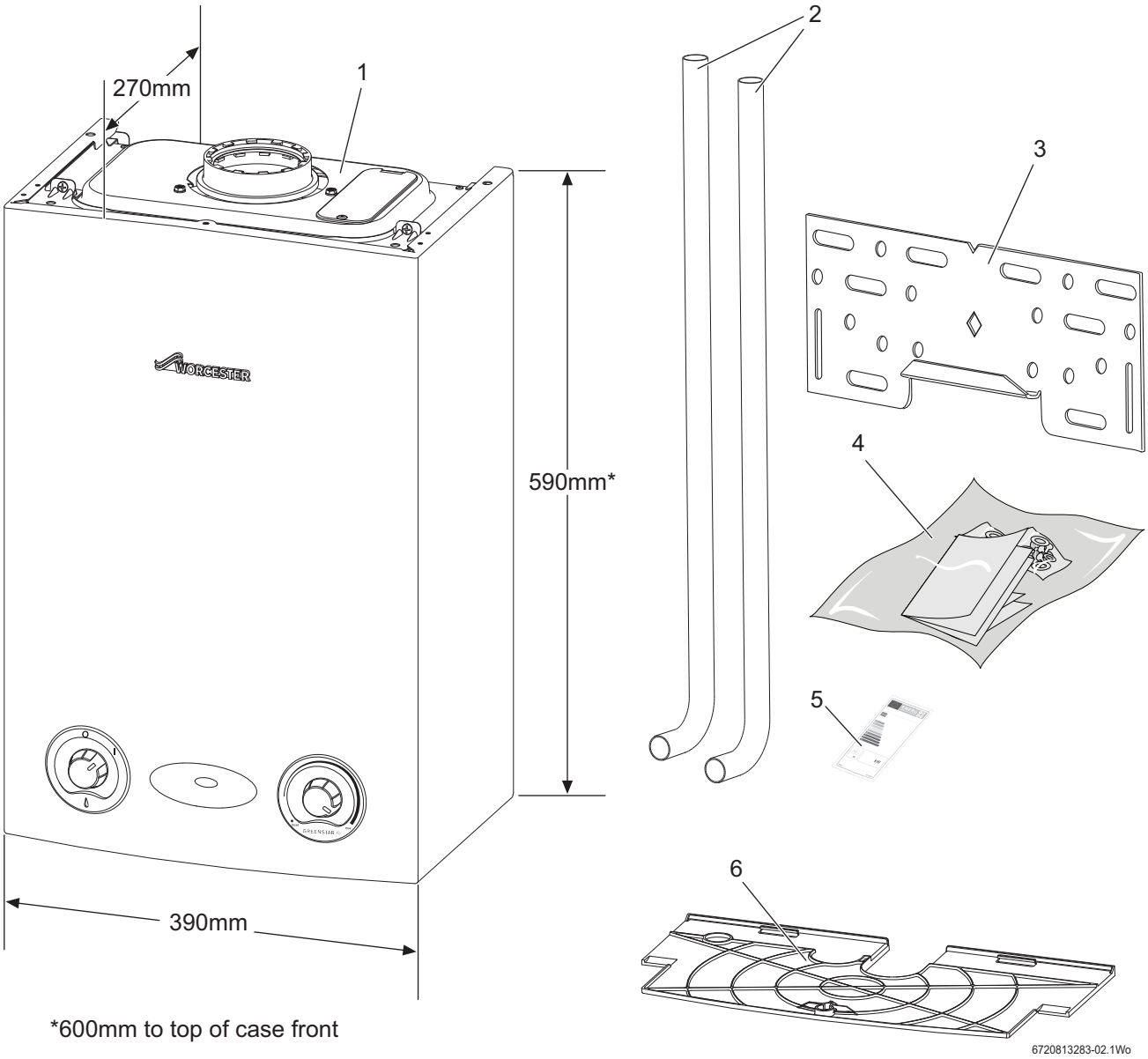

Fig. 1 Appliance

Do not use the pre-formed copper pipes supplied with the boiler for the gas supply.
These copper pipes are for water only.

STANDARD PACKAGE:	
1	Wall hung gas fired condensing regular boiler for central heating and domestic hot water
2	Tail pipes - water only
3	Wall plate
4	Hardware literature pack (see checklist)
5	ErP Label
6	Bottom panel and wall mounting template

CHECK LIST - HARDWARE LITERATURE PACK:	Qty.
Greenstar Ri Installation, Commissioning and Servicing Instructions	1
Users Instructions	1
Consumer Guarantee Card	1
Sealing Pack:	1
- Compression Nut 22mm	3
- Compression Ring 22mm	3
Elbow assembly pack	1
- Elbow Assembly	1
- Fibre Washer	1

Table 4 Hardware lit pack - checklist

3.2 TECHNICAL DATA

DESCRIPTION		NATURAL GAS				LPG			
	UNIT	12Ri	15Ri	18Ri	24Ri	12Ri	15Ri	18Ri	24Ri
Gas flow rate - Max. 10 minutes from lighting									
Natural Gas G20	m^3/h	1.3	1.63	1.96	2.6	-	-	-	-
Propane Gas (LPG)	kg/h	-	-	-	-	0.96	1.20	1.44	1.91
Central Heating									
Max. rated heat input (net)	kW	12.32	15.40	18.48	24.62	12.32	15.40	18.48	24.62
Min. heat input	kW	3.45	4.62	5.54	7.38	5.95	5.95	9.64	9.64
Maximum rated heat output 40/30 °C	kW	12.85	16.06	19.28	25.67	12.85	16.06	19.28	25.67
Maximum rated heat output 50/30 °C	kW	12.74	15.92	19.11	25.45	12.74	15.92	19.11	25.45
Maximum rated heat output 80/60 °C	kW	12	15	18	24	12	15	18	24
Maximum flow temperature	°C	82	82	82	82	82	82	82	82
Maximum possible flow temperature	°C	87	87	87	87	87	87	87	87
Maximum permissible operating pressure	bar	2.5	2.5	2.5	2.5	2.5	2.5	2.5	2.5
Flue									
Flue gas temp. 80/60 °C, rated/min. load	°C	62/56	66/58	70/60	78/63	62/57	66/59	71/61	79/64
Flue gas temp. 40/30 °C, rated/min. load	°C	41/33	44/33	48/34	54/35	43/35	46/36	49/37	55/38
CO_2 level at max. rated heat output (after 30 min)	%	9.65	9.8	9.8	9.8	11.0	11.0	11.0	11.0
CO_2 level at min. rated heat output (after 30 min)	%	8.65	9.2	9.2	9.2	10.5	10.5	10.5	10.5
NOx class		5	5	4	5	5	5	4	5
NOx rating	mg/kWh	39	60	84	66	44	60	84	66
Condensate									
Maximum condensate rate	l/h	0.93	1.2	1.5	2.0	0.7	0.9	1.2	1.5
pH value, approx.		4.8	4.8	4.8	4.8	4.8	4.8	4.8	4.8
Electrical									
Electrical power supply voltage	A.C. V	230	230	230	230	230	230	230	230
Frequency	Hz	50	50	50	50	50	50	50	50
Maximum power consumption	W	37	50	53	54	36	48	52	58
General data									
Appliance protection rating	IP	20	20	20	20	20	20	20	20
Permissible ambient temperatures	°C	0 - 50	0 - 50	0 - 50	0 - 50	0 - 50	0 - 50	0 - 50	0 - 50
Nominal capacity of appliance	litre	1.1	1.1	1.1	1.1	1.1	1.1	1.1	1.1
Packaged boiler weight	kg	31	31	31	31	31	31	31	31
Total boiler weight	kg	27.4	27.4	27.4	27.4	27.4	27.4	27.4	27.4
Lift weight	kg	22.6	22.6	22.6	22.6	22.6	22.6	22.6	22.6
SEDBUK	band	A	A	A	A	A	A	A	A
SEDBUK 2005	%	90.1	90.1	90.1	90.2	91.4	91.4	91.4	92.0

Table 5 Technical data Ri

3.3 Energy efficiency

NATURAL GAS APPLIANCES

The following product data satisfy the requirements of the EU Regulations No. 811/2013 and No. 812/2013 supplementing Directive 2010/30/EU.

Product data	Symbol	Unit	7733600074	7733600072	7733600070	7733600068
Product type	–	–	12Ri ErP NG	15Ri ErP NG	18Ri ErP NG	24Ri ErP NG
Condensing boiler	–	–	Yes	Yes	Yes	Yes
Low temperature boiler	–	–	No	No	No	No
B1 boiler	–	–	No	No	No	No
Cogeneration space heater (CHP)	–	–	No	No	No	No
Combination heater	–	–	No	No	No	No
Rated heat output	P_{rated}	kW	12	15	18	24
Seasonal space heating energy efficiency	η_s	%	91	91	91	92
Energy efficiency class	–	–	A	A	A	A
Useful heat output						
At rated heat output and high temperature regime [1]	P_4	kW	12	15	18	24
At 30 % of rated heat output and low temperature regime [2]	P_1	kW	4	5	6	8
Useful efficiency						
At rated heat output and high temperature regime [1]	η_4	%	87.7	87.7	87.7	88
At 30 % of rated heat output and low temperature regime [2]	η_1	%	97	97	97	97.9
Auxiliary electricity consumption						
At full load	el_{max}	kW	0.037	0.05	0.053	0.054
At part load	el_{min}	kW	0.02	0.026	0.023	0.021
In standby mode	P_{SB}	kW	0.006	0.006	0.006	0.006
Other items						
Standby heat loss	P_{stby}	kW	0.059	0.059	0.059	0.059
Ignition burner power consumption	P_{ign}	kW	0	0	0	0
Emissions of nitrogen oxides	NOx	mg/kWh	35	54	76	59
Annual energy consumption	Q_{HE}	kWh	-	-	-	-
Sound power level, indoors	L_{WA}	dB(A)	45	48	49	49

Table 6 Product data for energy consumption

1) High-temperature regime means 60 °C return temperature at heater inlet and 80 °C feed temperature at heater outlet.

2) Low temperature means for condensing boilers 30 °C, for low-temperature boilers 37 °C and for other heaters 50 °C return temperature (at heater inlet).

LPG appliances

The following product data satisfy the requirements of the EU Regulations No. 811/2013 and No. 812/2013 supplementing Directive 2010/30/EU.

Product data	**Symbol**	**Unit**	**7733600075**	**7733600073**	**7733600071**	**7733600069**
Product type	–	–	12Ri LPG	15Ri LPG	18Ri LPG	24Ri LPG
Condensing boiler	–	–	Yes	Yes	Yes	Yes
Low temperature boiler	–	–	No	No	No	No
B1 boiler	–	–	No	No	No	No
Cogeneration space heater (CHP)	–	–	No	No	No	No
Combination heater	–	–	No	No	No	No
Rated heat output	P_{rated}	kW	12	15	18	24
Seasonal space heating energy efficiency	η_s	%	91	91	91	92
Energy efficiency class	–	–	A	A	A	A
Useful heat output						
At rated heat output and high temperature regime [1]	P_4	kW	12	15	18	24
At 30 % of rated heat output and low temperature regime [2]	P_1	kW	4	5	6	8
Useful efficiency						
At rated heat output and high temperature regime [1]	η_4	%	87.7	87.7	87.7	88
At 30 % of rated heat output and low temperature regime [2]	η_1	%	97	97	97	97.9
Auxiliary electricity consumption						
At full load	el_{max}	kW	0.036	0.048	0.052	0.058
At part load	el_{min}	kW	0.023	0.021	0.027	0.021
In standby mode	P_{SB}	kW	0.006	0.006	0.006	0.006
Other items						
Standby heat loss	P_{stby}	kW	0.059	0.059	0.059	0.059
Ignition burner power consumption	P_{ign}	kW	0	0	0	0
Emissions of nitrogen oxides	NOx	mg/kWh	35	54	76	59
Annual energy consumption	Q_{HE}	kWh	-	-	-	-
Sound power level, indoors	L_{WA}	dB(A)	45	48	49	49

Table 7 Product data for energy consumption

1) High-temperature regime means 60 °C return temperature at heater inlet and 80 °C feed temperature at heater outlet.

2) Low temperature means for condensing boilers 30 °C, for low-temperature boilers 37 °C and for other heaters 50 °C return temperature (at heater inlet).

3.4 BOILER MAIN COMPONENTS

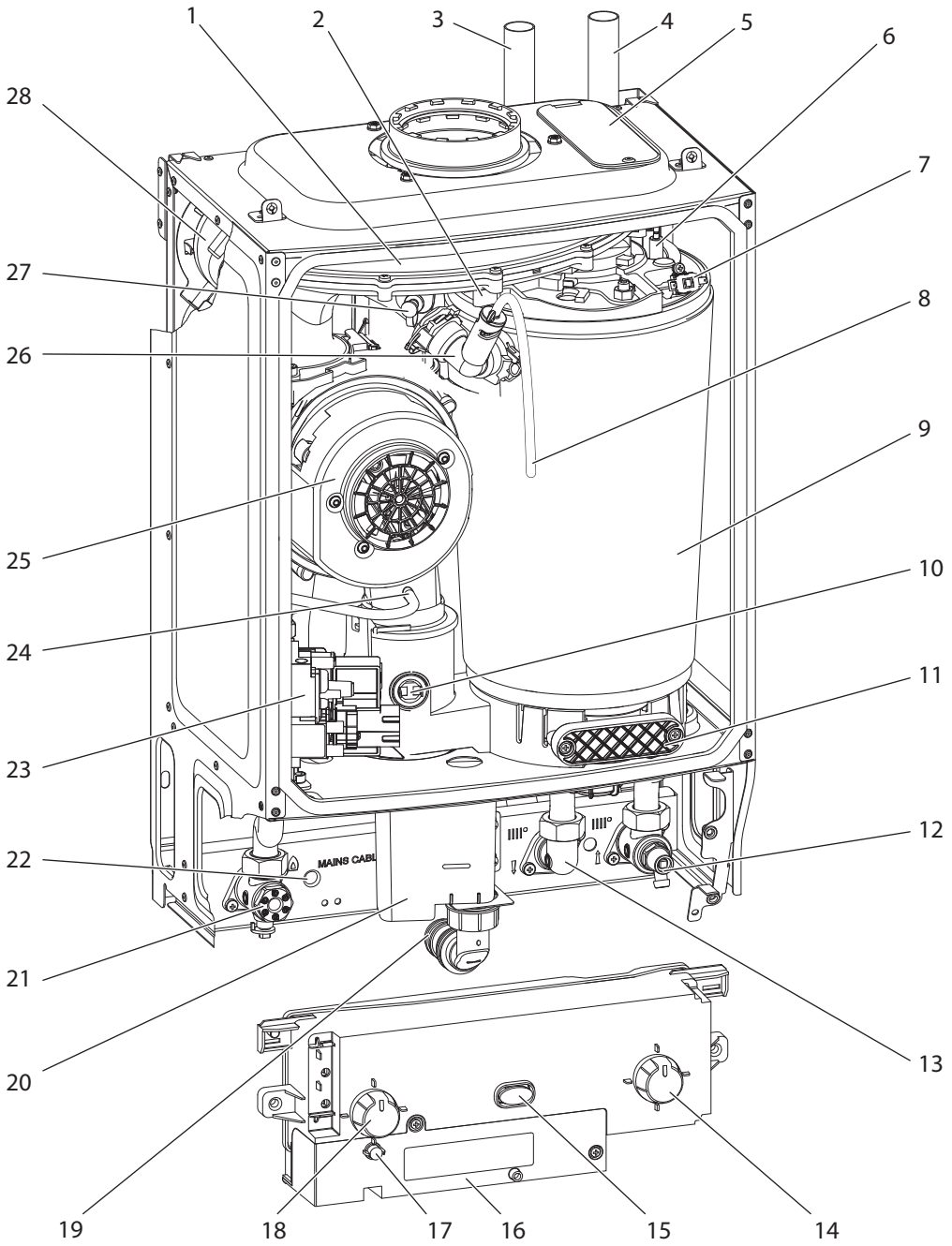

1	Air/Gas Manifold	15	Power and fault indicator (blue)
2	Sensor - Boiler flow	16	Wiring connections cover
3	Flow pipe	17	Burner indicator (green)
4	Return pipe	18	Boiler ON/OFF switch
5	Removable servicing panel	19	Condensate connection
6	Electrode assembly	20	Syphon / Trap
7	Overheat thermostat	21	Gas inlet connection
8	Silicon tube - Heat Exchanger air vent	22	Mains cable inlet
9	Heat Exchanger	23	Gas Valve
10	Flue overheat thermostat	24	Flue air pressure switch connection
11	Access panel - Heat Exchanger/Sump cleaning	25	Fan
12	Return connector with drain point	26	Manual vent point
13	Flow connector	27	Fan pressure test point
14	Boiler Temperature control and Reset knob	28	Air pressure switch

4 PRE-INSTALLATION

4.1 CLEANING PRIMARY SYSTEMS

NOTICE: All the following Pre-Installation sections must be read and requirements met before starting boiler or flue installations.

CAUTION: Isolate the mains supplies before starting any work and observe all relevant safety precautions.

NOTICE: Debris from the system can damage the boiler and reduce efficiency.
Failure to comply with the guidelines for the use of water treatment with the appliance will invalidate the appliance warranty.

BEFORE CLEANING THE SYSTEM:

- ▶ Ensure that the system and pipe work is in good working order.
- ▶ **Where possible keep the existing boiler/circulating pump in place when flushing the system.**

FOLLOW THE GUIDANCE OF BS7593:

Treatment of water in domestic hot water central heating and also the flushing guidelines below.

NOTICE: Artificially softened water must not be used to fill the central heating system.

FLUSHING THE SYSTEM

- ▶ Fill the system with cold water and check for leaks.
- ▶ Open all drain cocks and drain the system.
- ▶ Close drain cocks and add a suitable flushing agent **compatible with aluminium** at the correct strength for the system conditions in accordance with the manufacturer's instructions.
  The pH value of the system water must be less than 8 or the appliance guarantee will be invalidated.
- ▶ Circulate the flushing agent before the boiler is started.
- ▶ Run the boiler/system at normal operating temperature as directed by the manufacturer of the flushing agent.
- ▶ Drain and thoroughly flush the system to remove the flushing agent and debris.
- ▶ It may be necessary to use a power flushing machine to aid the cleansing procedure in some circumstances.
- ▶ Close the drain cocks and refill with fresh water and a suitable inhibitor.
- ▶ Vent any air from the boiler and system.

INHIBITOR

Add a suitable inhibitor or combined inhibitor/anti-freeze, if the system is exposed to freezing conditions, to the heating system in accordance with the DWTA code of practice and manufacturer's guidelines.

WARNING: Sealing agents

- ▶ Normally the addition of sealing agents to the system water is not permitted as this can cause problems with deposits left in the heat exchanger.
- ▶ In cases where all attempts to find a micro leak have failed, Worcester, Bosch Group supports the use of Fernox F4 leak sealer.

WATER TREATMENT PRODUCTS

Suitable water treatment products can be obtain from the following manufacturers:

FERNOX	0870 601 5000 or www.fernox.com
SENTINEL	0800 389 4670 or www.sentinel-solutions.net

ARTIFICIALLY SOFTENED WATER

It is possible to have an Ion exchange water softener fitted to the cold water system of the property. However, the boiler requires an untreated cold water connection taken from the mains supply, before the water softener, to the primary water filling point of the heating system.
Alternatively there are water softening/treatment devices that do not adjust or alter the pH levels of the water. With these devices it may not be necessary to provide an untreated water by-pass to the primary water filling point of the heat system.

4.2 MAINS SUPPLY

4.2.1 ELECTRICAL SUPPLY

- Supply: 230V - 50 Hz, 140 Watts
- Cable: PVC insulated 0.75mm^2 (24 x 0.2mm) temp. rated to 90 °C.
- External 3A fuse to BS1362.
- The appliance must be earthed.
- Do not connected the appliance to a 3 phase supply.
- IP20.
- Wiring must comply with the latest edition of BS 7671 (IET wiring regulations).

4.2.2 GAS SUPPLY

To ensure that the equipment is in good working order and can meet the gas flow and pressure requirements, in addition to the demand from any other appliance being served, the following applies:

- Boilers using Natural Gas (NG) must be connected to a governed meter.
- Liquid Petroleum Gas (LPG) must be connected to a regulator.
- Installation and connection of the gas supply to the boiler must be in accordance with BS6891.
- Gas pipe sizing should be calculated to ensure no more than the permitted mbar drop between the meter/governor to the appliance inlet. (→ Commissioning section).
- The meter or regulator and pipe work to the meter must be checked, preferably by the gas supplier.

4.3 WATER SYSTEMS AND PIPE WORK

PLASTIC PIPE WORK:

- Any plastic pipe work must have a polymeric barrier with 600mm (minimum) length of copper pipe connected to the boiler.
- Plastic pipe work used for underfloor heating must be correctly controlled with a thermostatic blending valve limiting the temperature of the circuits to approximately 50 °C.

PRIMARY SYSTEMS CONNECTIONS/VALVES:

- All system connections, taps and mixing valves must be capable of sustaining a pressure up to 3 bar.
- Radiator valves should conform to BS2767:10.
- All other valves should conform to BS1010.
- Thermostatic radiator valves (TRV) must be used on all radiators within the sleeping accommodation.
  The radiator where the room thermostat is sited must be fitted with lock-shield valves and left open.
- A drain cock is required at the lowest point in the system.
- An air vent is required at all high points in the system.

SEALED PRIMARY SYSTEM:

NOTICE: Artificially softened water must not be used to fill the central heating system.

- The CH sealed system must be filled using a WRAS approved filling loop or comply with figure 2 for system fill.
- An expansion vessel, of a size suitable for the system, must be fitted as close as possible to the appliance in the central heating return.
- Also fit a pressure gauge, a 3 bar pressure relief valve and stop cock (fixed cylinder type or sealed system approved connection).
- **Do not use galvanised pipes or radiators**.

SYSTEM FILL

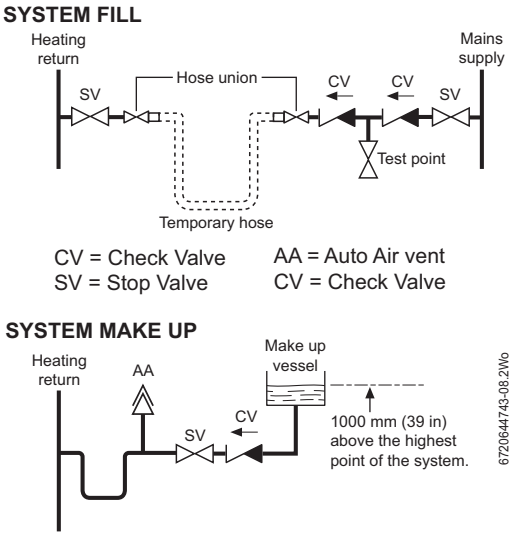

Fig. 2 System fill/System make-up

S AND Y PLAN SYSTEMS:

NOTICE: Bypass
▶ Generally a bypass is not necessary on a Y plan system as one of the ports is open to flow.

1	Static head - Minimum static head 250mm measured from the highest point in the heating system (top surface of the appliance or the highest point in the heating system) to the water level in the feed and expansion tank
2	Heating vent (22mm minimum)
3	Primary cold feed (15mm minimum)
4	Diverter/Zone valve
5	Pump, maximum power 90 Watts
6	Automatic bypass
7	Radiator valve (Flow)
8	Lock shield valve (Return)
9	Expansion vessel
10	Pressure gauge
11	3 bar pressure relief valve
12	Stop cock

Table 8 Key to figures 3, 4 & 5

NOTICE: A drain cock should be fitted at the lowest point of the heating circuit and beneath the appliance.

FULLY PUMPED SEALED SYSTEM:

The central heating sealed system must be filled using a WRAS approved filling loop or comply with figure 2 for System fill.

S PLAN LAYOUT

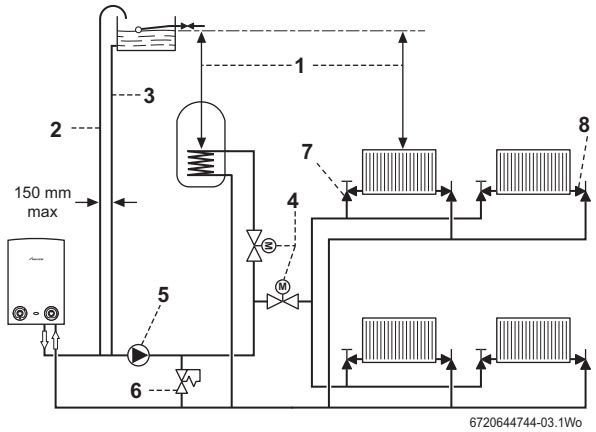

Fig. 3 S plan

Y PLAN LAYOUT

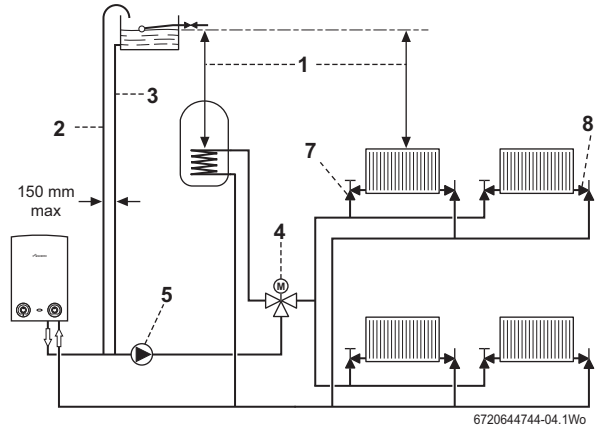

Fig. 4 Y plan

SEALED SYSTEM Y PLAN LAYOUT

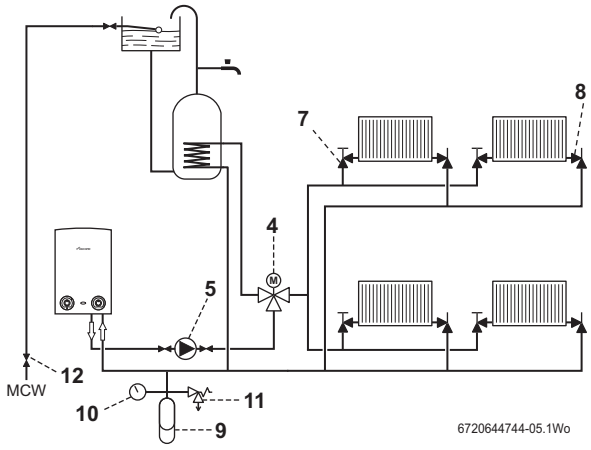

Fig. 5 Sealed system

NEW BUILD SYSTEM LAYOUTS

The latest Part L1a regulation for new installations require separate zone controls for the central heating.

Open vent with two heat zones

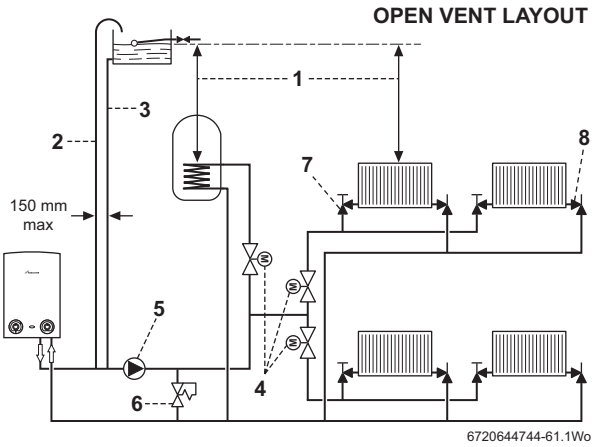

Fig. 6

Sealed system with two heat zones

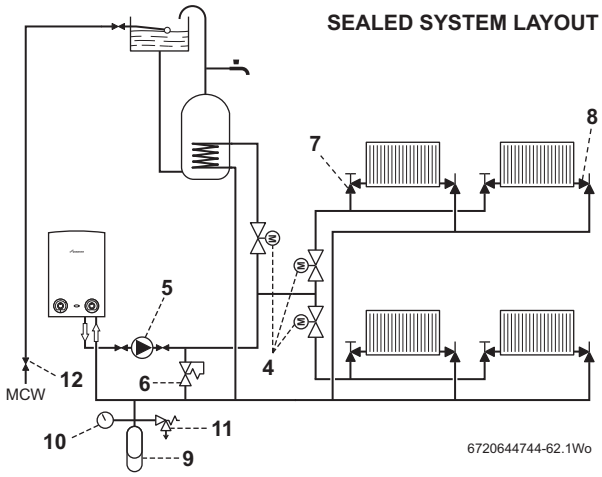

Fig. 7

4.4 CONDENSATE PIPE WORK

NOTICE:

- Where a new or replacement boiler is being installed, access to an internal "gravity discharge" point should be one of the factors considered in determining boiler location.
- The condensate pipe must be nominally 22mm Ø plastic pipe.
- The condensate pipe work must fall at least 52mm per metre towards the outlet and should take the shortest practicable route.
- Ensure there are no blockages in the pipe run.

Key to condensate illustrations	
1	Condensate discharge from boiler
2	Soil and vent stack
3	Minimum 450mm and up to three storeys
4	Visible air break at plug hole
5	Sink or basin with integrated overflow
6	75mm sink waste trap
7	Condensate pump
*	Condensate trap of 75mm already incorporated into the boiler

4.4.1 INTERNAL CONNECTIONS

In order to minimise risk of freezing during prolonged cold spells, the following methods of installing condensate drainage pipe should be adopted, in order of priority.

Wherever possible, the condensate drainage pipe should be routed and terminated so that the condensate drains away from the boiler under gravity to a suitable internal foul water discharge point such as an internal soil and vent stack. A suitable permanent connection to the foul waste pipe should be used.

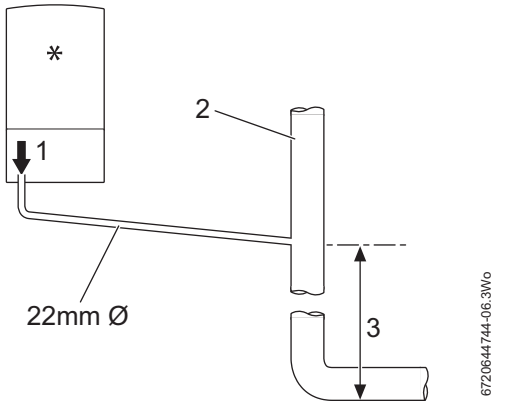

Fig. 8 Disposal to soil vent stack

Alternatively if the first option is not possible an internal kitchen or bathroom waste pipe, washing machine waste pipe etc. can be used. Ensure that the condensate drain pipe is connected "down stream" of the waste trap.

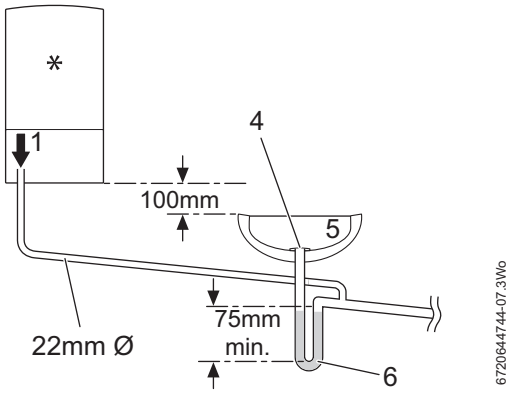

Fig. 9 Disposal to a waste pipe

CONDENSATE PUMP

Where "gravity discharge" to an internal termination is not physically possible, or where very long internal runs would be required to reach a suitable discharge point, condensate should be removed using a proprietary condensate pump, of a specification recommended by the boiler or condensate pump manufacturer.

The pump outlet pipe should discharge to a suitable internal foul water discharge point such as an internal soil and vent stack, internal kitchen or bathroom waste pipe, washing machine waste pipe etc. A suitable permanent connection to the foul waste pipe should be used.

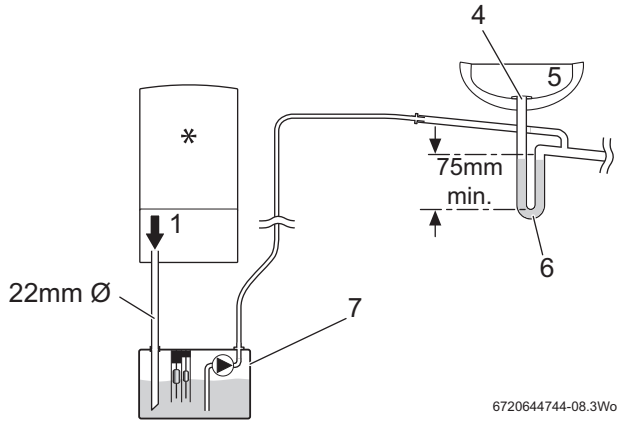

Fig. 10 Condensate pump disposal

4.4.2 EXTERNAL CONNECTIONS

NOTICE: Freezing conditions
- ▶ When the position of the boiler prevents internal routing, we recommend installing a CondenseSure siphon to significantly reduce the risk of freezing.
- ▶ Pipe work length should be kept to a minimum and the route as vertical as possible.
- ▶ Weather proof insulation must be used, if not using a CondenseSure siphon.

NOTICE: Condensate waste
- ▶ Care should be taken when siting a soak-away to avoid obstructing existing services.

Continued - Key to condensate illustrations	
8	PVCu strap on fitting
9	100mm Ø minimum plastic pipe
10	Drainage holes
11	Limestone chippings
12	Bottom of sealed tube
13	Insulate and increase pipe size
14	Pipe work transition
15	External air break
16	Air gap
17	External rain water pipe into foul water
18	43mm 90° male/female bend
*	Condensate trap of 75mm already incorporated into the boiler

If no other discharge method is possible then the use of an externally run condensate drainage pipe terminating at a suitable foul water discharge point, or purpose-designed soak away, may be considered. If this method is chosen then the following measures should be adopted:

Use of the CondenseSure siphon will prevent condensate freezing on a 3 metre straight, 32mm Ø , uninsulated pipe at a temperature of -15 °C for 48 hours.

- ▶ The external run be kept as short as possible and not exceed 3 metres.
- ▶ The pipe should be run internally as far as possible before going externally and the pipe diameter should be increased to 32mm before it passes through the wall to the exterior. The pipe should be insulated using suitable waterproof and weather resistant insulation, if not using a CondenseSure siphon.
- ▶ The external pipe should take the shortest and least exposed route to the discharge point, and should "fall" as steeply as possible away from the boiler, with no horizontal runs in which condensate might stand.
- ▶ The use of fittings, elbows etc. should be kept to a minimum and any internal “burrs” on cut pipe work should be removed so that the internal pipe section is as smooth as possible.

FITTING AN EXTERNAL AIR BREAK
- Refer to figure 11 when a rain water down pipe is used to dispose of condensate.
- An air break must be installed in the 43mm pipe work, between the boiler condensate outlet and the drainpipe, outside the property, to avoid flooding during adverse weather conditions.

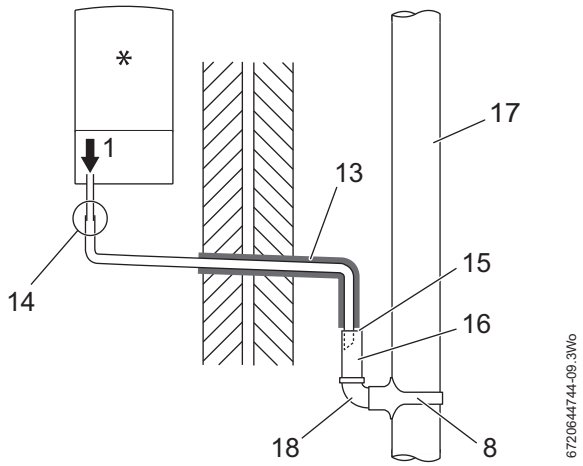

Fig. 11 Disposal into a rainwater down pipe

Condensate drainage pipe can be run above or below ground.

Where the pipe terminates over an open drain or gully, the pipe should terminate below the grating level, but above water level, in order to minimise “wind chill” at the open end.

The use of a drain cover (such as those used to prevent blockage by leaves) may offer further protection from wind chill.

Pipe drainage will be improved if the end is cut at 45° as opposed to a straight cut.

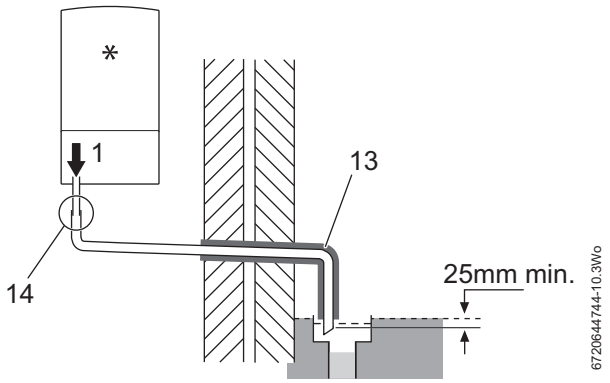

Fig. 12 External disposal

CONDENSATE SOAK AWAY
- The condensate drainage pipe may be run above or below the ground to the soak away. The examples shown on this page run above ground.
- The soak away must use a 100mm Ø plastic tube with two rows of three 12mm holes on 25mm centres and 50mm from the bottom of the tube. The holes must face away from the house.
- The tube must be surrounded by at least 100mm of limestone chippings to a depth of 400mm.

Minimum hole size for the condensate soak away must be 400mm deep by 300mmØ .

In situations where there are likely to be extremes of temperature or exposure, the use of a proprietary trace-heating system for external pipe work, incorporating an external frost thermostat, should be considered. If such a system is used, the requirement to use 32mm pipe does not apply. However, all other guidance above and the instructions for the trace heating system, should be closely followed.

NOTICE: Unheated internal areas.
- ▶ Internal pipe runs in unheated areas such as lofts, basements and garages should be treated as external runs and consideration should be given to using a CondenseSure siphon.

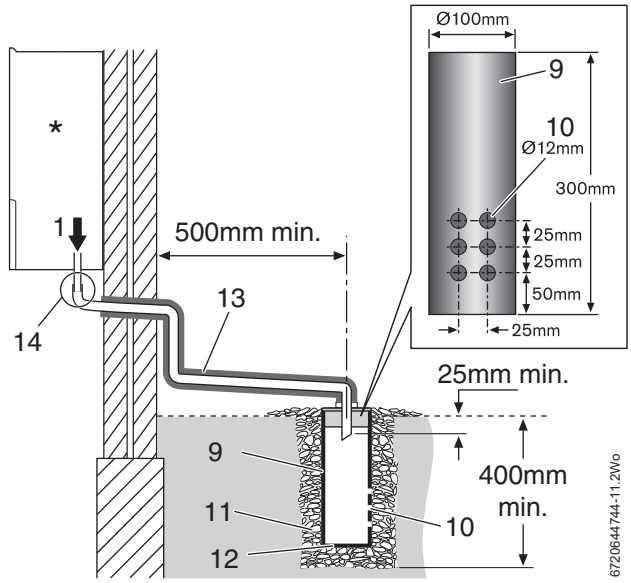

Fig. 13 Soak away

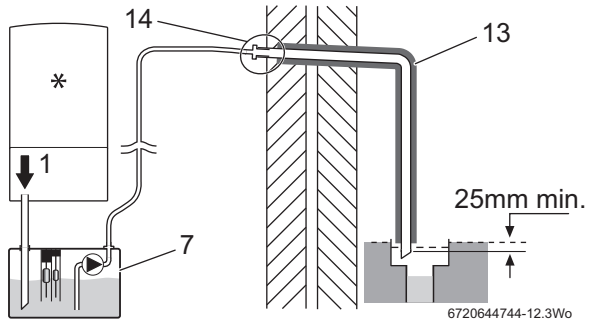

Fig. 14 Condensate pump to external disposal

4.5 PRESSURE RELIEF PIPE WORK

NOTICE:
- ▶ The pressure relief valve is a safety device for the boiler and if activated may discharge boiling water or steam through the relief valve drain pipe.
- ▶ Care should be taken when siting the outlet pipe so that it does not cause an obstruction or discharge above a window, entrance or other public access where it could cause a hazard.

- The pressure relief drain pipe (1) from the boiler should be at least 15mm diameter copper pipe and run downwards, away from any electrical equipment or other hazard, preferably to an external drain or soak away.
- Pipe (1) should be finished with a partial bend, near the outlet to face the external wall (as shown) to help prevent freezing.

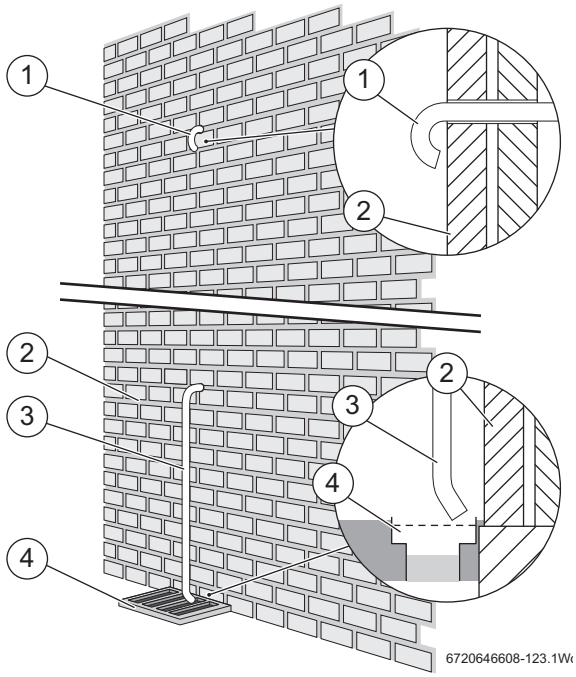

Fig. 15 Pressure relief pipe work

2	Outside wall
1,3	Drain pipe
4	External drain

Table 9 Key to fig 15

4.6 BOILER LOCATION AND CLEARANCES

4.6.1 Installation

This appliance is only suitable for installing internally within a property at a suitable location onto a fixed, rigid surface at least the same size as the appliance and capable of supporting the appliance weight.

No surface protection is required against heat transfer from the appliance.

The appliance must be installed where:
- An engineer can gain clear and safe access to work on the product or component, including making adequate provision for visual inspection of flues in voids.
- The homeowner can gain clear and safe access to the controls, check, top up or reset the appliance.
- Products in loft cavities must have permanent fixed lighting, a permanent fixed retractable ladder and a fixed floor area sufficient to allow access for normal use and servicing directly under and around the product and between and the access hatch.

4.6.2 SERVICING CLEARANCES - VENTILATED COMPARTMENT

Figure 16 shows the minimum space required to install and service the boiler in a ventilated compartment.
- If a boiler is installed in a compartment with clearances less than shown in the tables 12, 13, or 14 ventilation is required. Refer to table 10 for ventilation requirements.

Vent position	To room or internal space	Direct to outside
High level	Min. free area 122cm^2	Minimum free area 61cm^2
Low level	Min. free area 122cm^2	Minimum free area 61cm^2

Table 10 Compartment ventilation

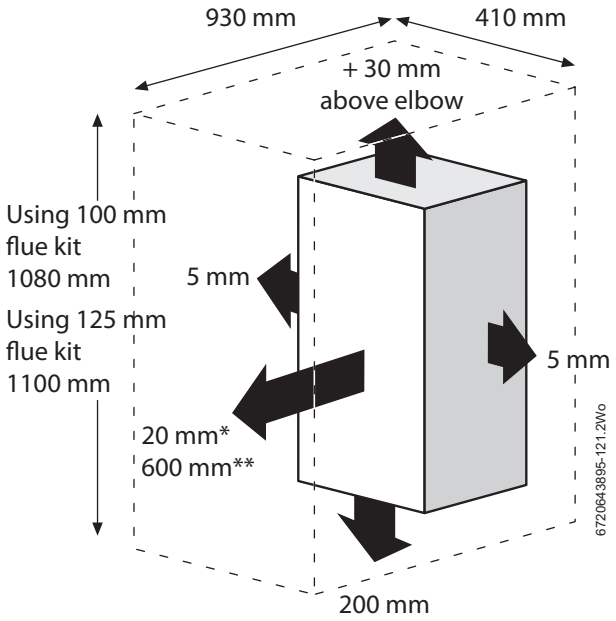

Fig. 16 Ventilated compartment

*	Minimum clearance to removable door
**	Minimum clearance required for servicing

Table 11 Minimum clearances

4.6.3 COMPARTMENTS:

Follow the requirements of BS6798 and BS5440 Part 2 and note:

- Minimum clearances must be maintained.
- An access door is required to install, service and maintain the boiler and any ancillary equipment.
- If the boiler is installed in an unventilated airing/storage cupboard, there is no requirement to make a partition between the boiler and the storage space as long as the minimum clearances around the boiler are maintained.
- Ideally, storage should be below the boiler, where the boiler is mounted in the upper part of the cupboard, whilst maintaining the clearances given in tables 12, 13, or 14.

4.6.4 BOILER CLEARANCES- UNVENTILATED COMPARTMENTS

The tables below show the options for the minimum space required to install and service the boiler inside an unventilated compartment.

4.6.5 INSTALLATION CLEARANCES - UNVENTILATED COMPARTMENTS

CAUTION: CLEARANCES

▶ Top and bottom clearances must not be reduced below the values shown in table 12 as they are the minimum clearances required for servicing.

Unventilated Compartment Installation Clearances (millimetres)			
Suggested total unventilated compartment minimum clearances are:			
Side	Above	Below	Front (to removable door)
400mm	170mm approx. (30mm above elbow)	200mm	100mm

Table 12 Minimum unventilated compartment clearances

If Side Clearances are Reduced (millimetres)			
If total side clearance is reduced to: (Combined left and right clearances excluding the boiler)	Increase height clearances to (approx.): (Combined top & bottom clearances excluding the appliance)	OR	Front clearance (to removable door) must be increased to:
350	441		129
300	523		161
250	617		200
200	717		243
150	856		295
100	1012		358
50	1202		434

Table 13 Reduced side clearances

If Front Clearance is Reduced (millimetres)			
If front clearance (to removable door) is reduced to:	Increase overall height clearances to (approx.): (Combined top and bottom clearances excluding the appliance)	OR	Increase total side clearance to: (Combined left and right clearances excluding the appliance)
50mm	511mm		505mm
25mm	596mm		569mm

Table 14 Reduced front clearances

4.6.6 BATHROOMS

The boiler may only be installed outside the shaded area.

Additional RCD (Residual Current Device) protection may be required.

Refer to the latest IET wiring regulations.

2*	Without the end wall, zone 2 must extend 600mm from the bath

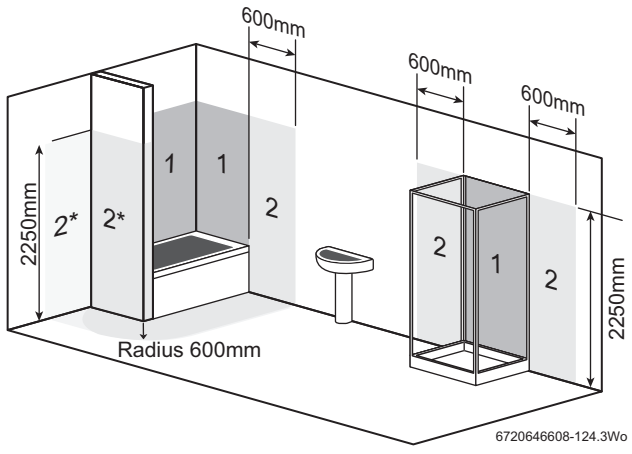

Fig. 17 Bathroom installations

4.7 PLUMBING MANIFOLD

4.7.1 CONNECTIONS

Heating System	22mm compression fittings
Gas	22mm compression fittings

Use the fittings supplied in the Hardware literature pack:

Do not use the pre-formed copper pipes supplied with the boiler for the gas supply.
These copper pipes are for water only.

- Use the 22mm copper pipes (1 & 2) provided with the appliance, as shown in the diagram opposite.
- If the flow and return pipes are to be run behind the appliance it maybe an advantage to connect the pipes before hanging on the wall especially if space is limited.

Further guidance on pipe routing can be found printed on the boiler template (supplied with the boiler).

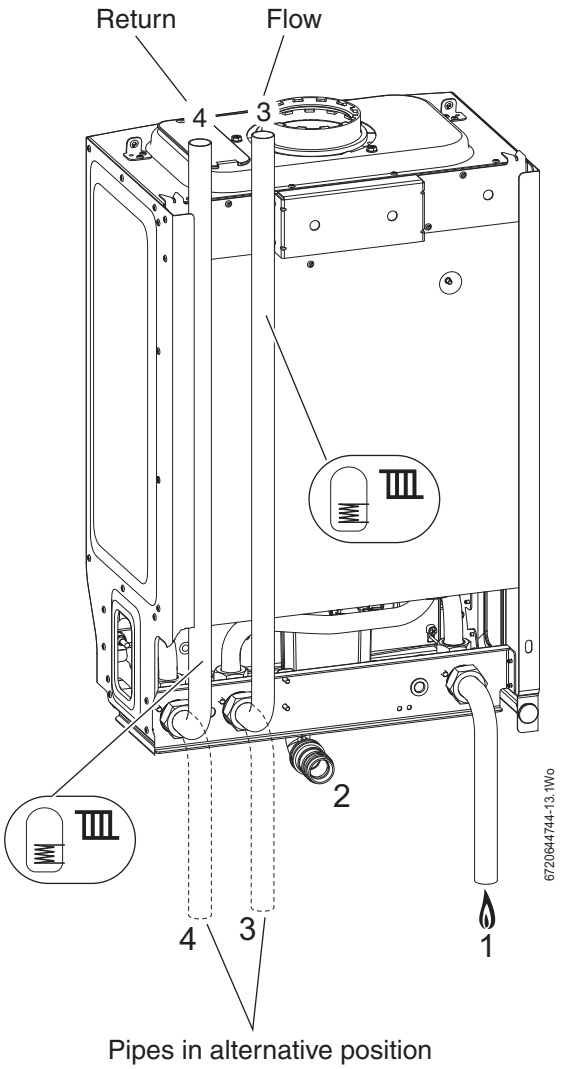

Fig. 18 Plumbing manifold

#	Function	From left case edge	Diameter of pipe
1	Gas	55mm	22mm
2	Condensate	210mm	22mm
3	Cylinder & CH Flow	285mm	22mm
4	Cylinder & CH Return	350mm	22mm

Table 15 Key to figures 18 & 19

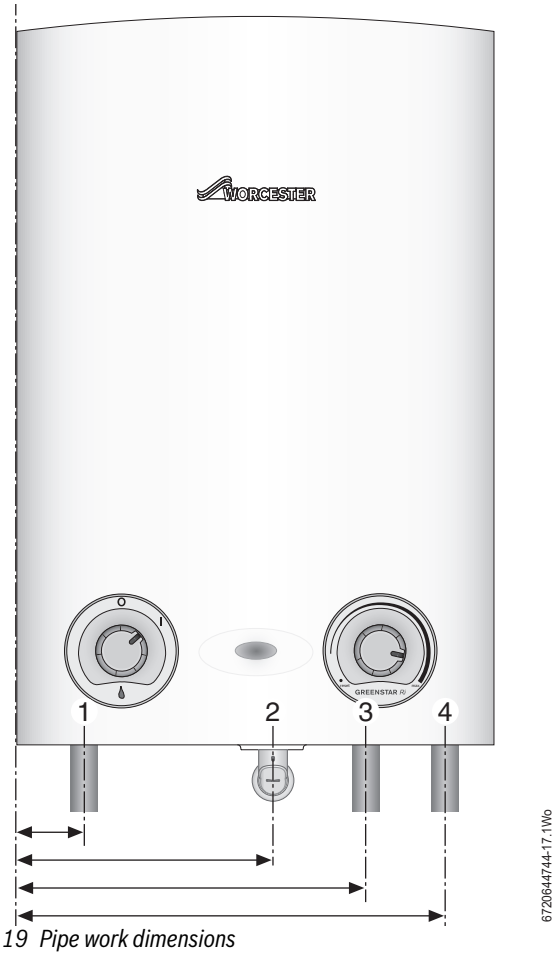

Fig. 19 Pipe work dimensions

4.8 FLUE OPTIONS

WARNING: Flue systems
- Only use Worcester, Bosch approved flue systems, no other manufacturer's flue systems have been approved for use with Worcester appliances.

CAUTION: Non accessible flue systems:
- Where a flue system is not going to be accessible, provision must be made for service and inspection.
- Voids containing concealed flues must have at least one inspection hatch no less than 300mm square.
- Flue joints within the void must not be more than 1.5 metres from the edge of the inspection hatch.
- Inspection hatches should be located at changes of direction.
- If this is not possible, bends should be viewable from both directions.

NOTICE: Effective flue lengths:
- each 90° bend is equivalent to 2 metres of straight flue
- each 45° bend is equivalent to 1 metre of straight flue

Plume management kits are available for the 60/100 horizontal flue system.
Refer to the manual supplied with the plume management kits for complete installation instructions

Part number	Flue	Description
7 716 191 082	60/100	Telescopic horizontal flue assembly
7 716 191 171	60/100	Longer telescopic horizontal flue assembly
7 733 600 048	60/100	Horizontal high level telescopic flue kit
7 719 003 702	80/125	Telescopic horizontal flue assembly
7 719 002 430	60/100	Vertical flue assembly
7 719 002 431	80/125	Vertical flue assembly

Table 16 Flue kit part numbers

4.8.1 Flue lengths

The flue systems have different maximum flue lengths

The Greenstar series has the option of two horizontal 60/100 RSF (telescopic and longer telescopic) and one horizontal 80/125 RSF (telescopic) flue system and two vertical RSF (60/100 or 80/125) flue systems:

Refer to the following example Flue options for the maximum flue lengths.

Condensfit II

Horizontal high level flue assembly

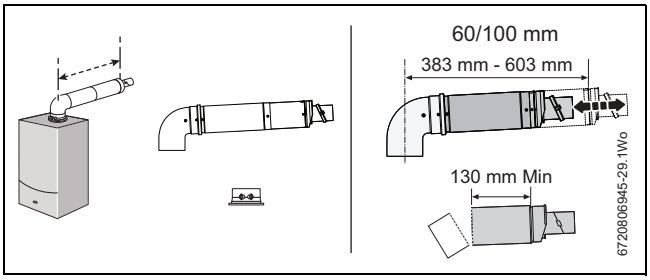

	Flue length (mm)	
	60/100	80/125
Horizontal high level telescopic flue assembly	202 - 603	N/A

Table 17

TELESCOPIC HORIZONTAL FLUE ASSEMBLY

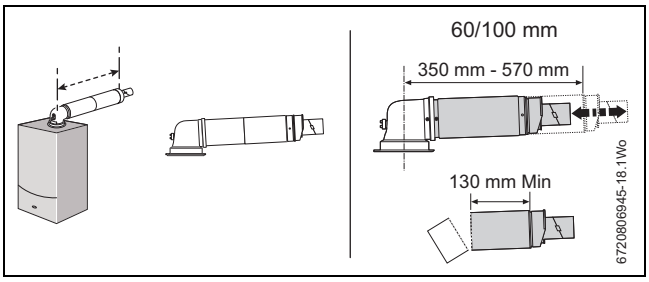

	Flue length (mm)	
	60/100	80/125
Telescopic horizontal flue assembly	180 - 570	405 - 600
Longer telescopic horizontal flue assembly	570 - 790	N/A

Table 18

Extended horizontal flue

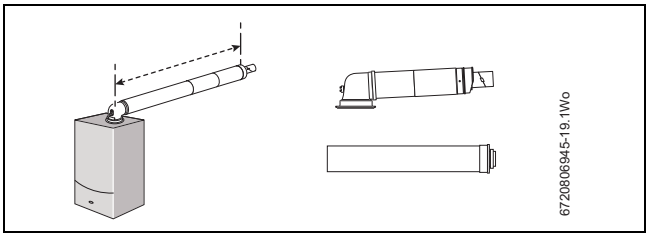

	Maximum flue length (mm)	
	60/100	80/125
Extended horizontal flue	4,600	13,000

Table 19

Horizontal flue with additional elbow (1 x 90 ° bend)

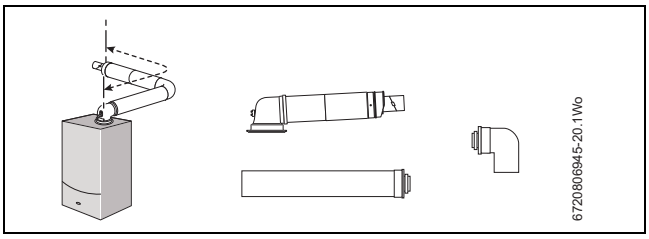

	Maximum flue length (mm)	
	60/100	80/125
Horizontal flue with 1 x 90° bend	2,600	11,000

Table 20

Horizontal flue with additional elbows (2 x 90 ° bends)

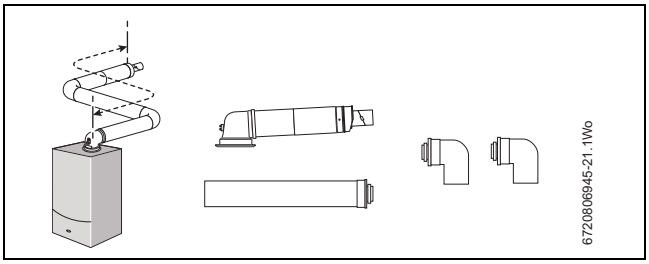

	Maximum flue length (mm)	
	60/100	80/125
Horizontal flue with 2 x 90° bends	N/A	9,000

Table 21

High level horizontal flue

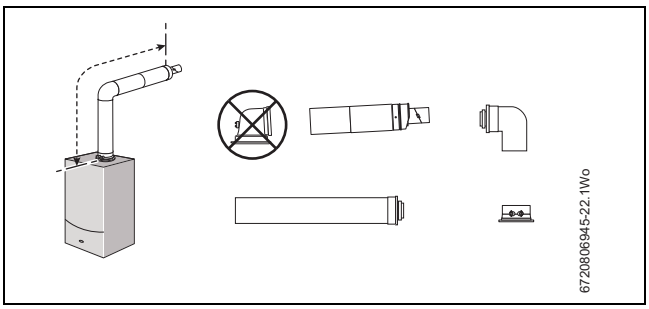

	Maximum flue length (mm)	
	60/100	80/125
High level horizontal flue	4,600	13,000

Table 22

High level horizontal flue with additional elbows

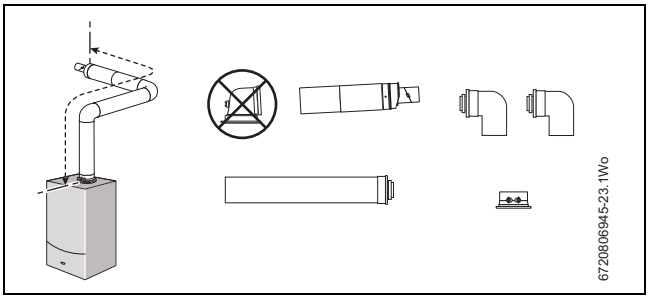

	Maximum flue length (mm)	
	60/100	80/125
High level horizontal flue with 2 x 90° bends	2,600	11,000

Table 23

High level horizontal flue with additional elbows

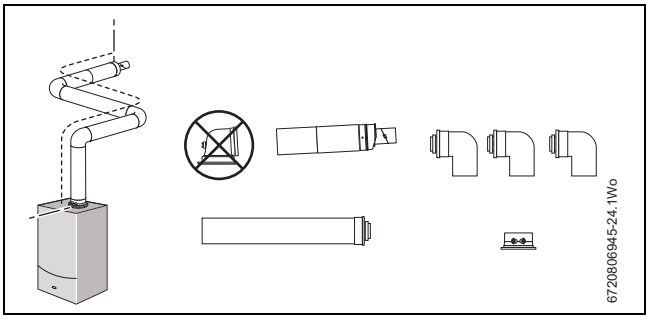

	Maximum flue length (mm)	
	60/100	80/125
High level horizontal flue with 3 x 90° bends	N/A	9,000

Table 24

Vertical balanced flue assembly

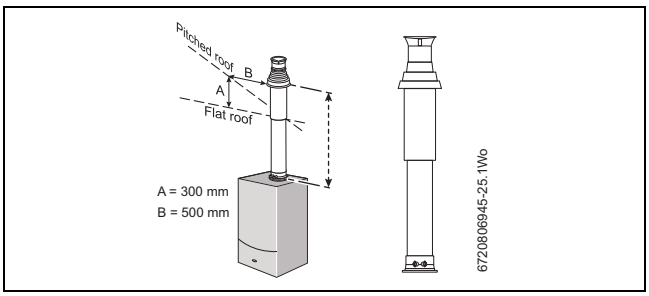

	Maximum flue length (mm)	
	60/100	80/125
Vertical balanced flue assembly	6,400	15,000

Table 25

Vertical balanced flue with elbow offset (2 x 90 ° bends)

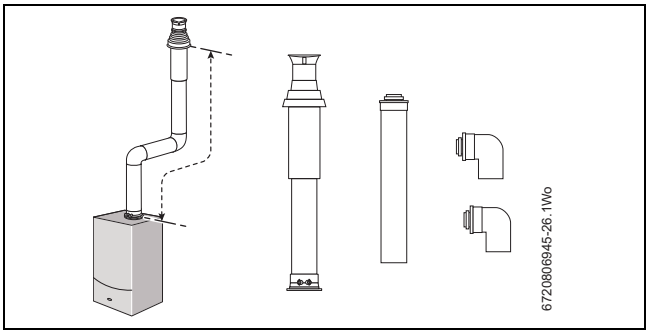

	Maximum flue length (mm)	
	60/100	80/125
Vertical balanced flue with 2 x 90° bends	2,400	11,000

Table 26

Vertical balanced flue with elbow offset (2 x 45 ° bends)

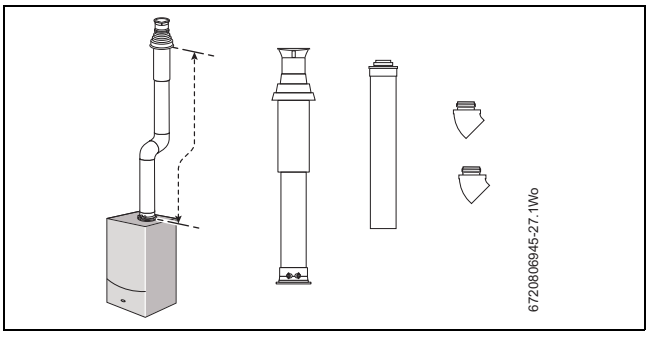

	Maximum flue length (mm)	
	60/100	80/125
Vertical balanced flue with 2 x 45° bends	4,400	13,000

Table 27

4.9 FLUE TERMINAL POSITIONS

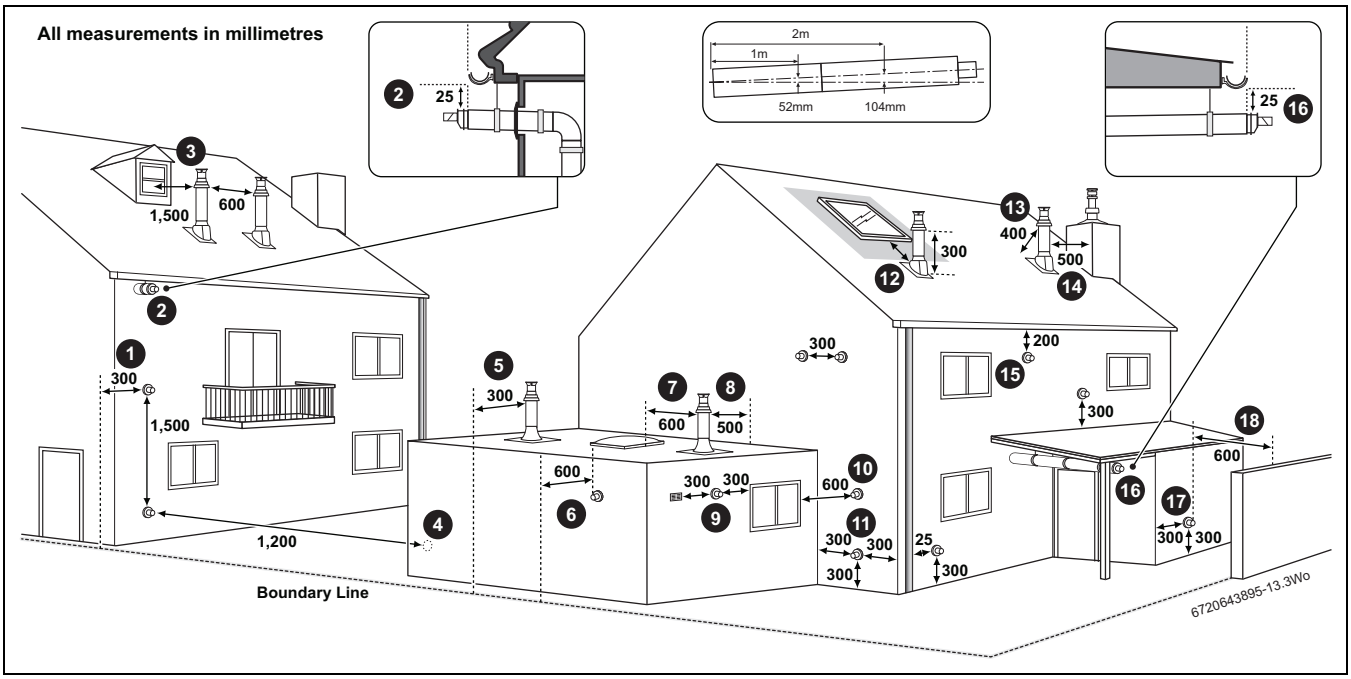

Fig. 20 Flue terminal positions

NOTICE:

- All measurements are the minimum clearances required.
- Terminals must be positioned so to avoid combustion products entering the building.
- Support the flue at approximately one metre intervals and at a change of direction, use suitable brackets and fittings. (flue bracket 100mm part number: 7 716 191 177, flue brackets 100mm x 6 part number: 7 716 191 178, flue bracket 125mm part number: 7 716 191 179).

Key to illustration

1. 300mm adjacent to a boundary line.
2. The dimension below eaves, gutters, pipes and drains can be reduced to 25mm, as long as the flue terminal is extended to clear any overhang. External flue joints must be sealed with suitable silicon sealant.
3. 1,500mm between a vertical flue terminal and a window or dormer window.
4. 1,200mm between terminals facing each other.
5. Vertical flue clearance, 300mm adjacent to a boundary line unless it will cause a nuisance. BS 5440:Part 1 recommends that care is taken when siting terminal in relation to boundary lines
6. 600m distance to a boundary line, unless it will cause a nuisance. BS 5440:Part 1 recommends that care is taken when siting terminal in relation to boundary lines.
7. 600mm minimum clearance from a skylight to a vertical flue.
8. Vertical flue clearance, 500mm to non-combustible building material, and 1,500mm clearance to combustible building material.
9. 300mm above, below and either side of an opening door, air vent or opening window.
10. 600mm diagonally to an opening door, air vent or opening window.
11. 300mm to an internal or external corner. This does not apply to building protrusions less than 450mm.
12. 2,000mm below a Velux window, 600mm above or to either side of the Velux window.
13. 400mm from a pitched roof or 500mm in regions with heavy snow fall.
14. 500mm clearance to any vertical structure on a roof, 600mm to room sealed flue or 1,500 to an open flue.
15. 200mm below eaves and 75mm below gutters, pipe and drains.
16. The dimension below eaves, balconies and car ports can be reduced to 25mm, as long as the flue terminal is extended to clear any overhang. External flue joints must be sealed with suitable silicon sealant.
17. Flue clearance must be at least 300mm from the ground. Terminal guards must be fitted if the flue is less than 2 metres from the ground or if a person could come into contact with the flue terminal.
18. 600mm distance to a surface facing a terminal, unless it will cause a nuisance. BS 5440: Part 1 recommends that care is taken when siting terminals in relation to surfaces facing a terminal.

Note:

- Installations in car ports are not recommended.
- The flue cannot be lower than 1,000mm from the top of a light well due to the build up of combustion products.
- Dimensions from a flue terminal to a fanned air inlet to be determined by the ventilation equipment manufacturer.
- A flue terminal guard should be fitted over a terminal, if persons could come into contact with the terminal, or it could be subject to damage and where the terminal is less than 2,000mm from the finished floor level.

4.10 PLUME MANAGEMENT TERMINAL POSITIONS

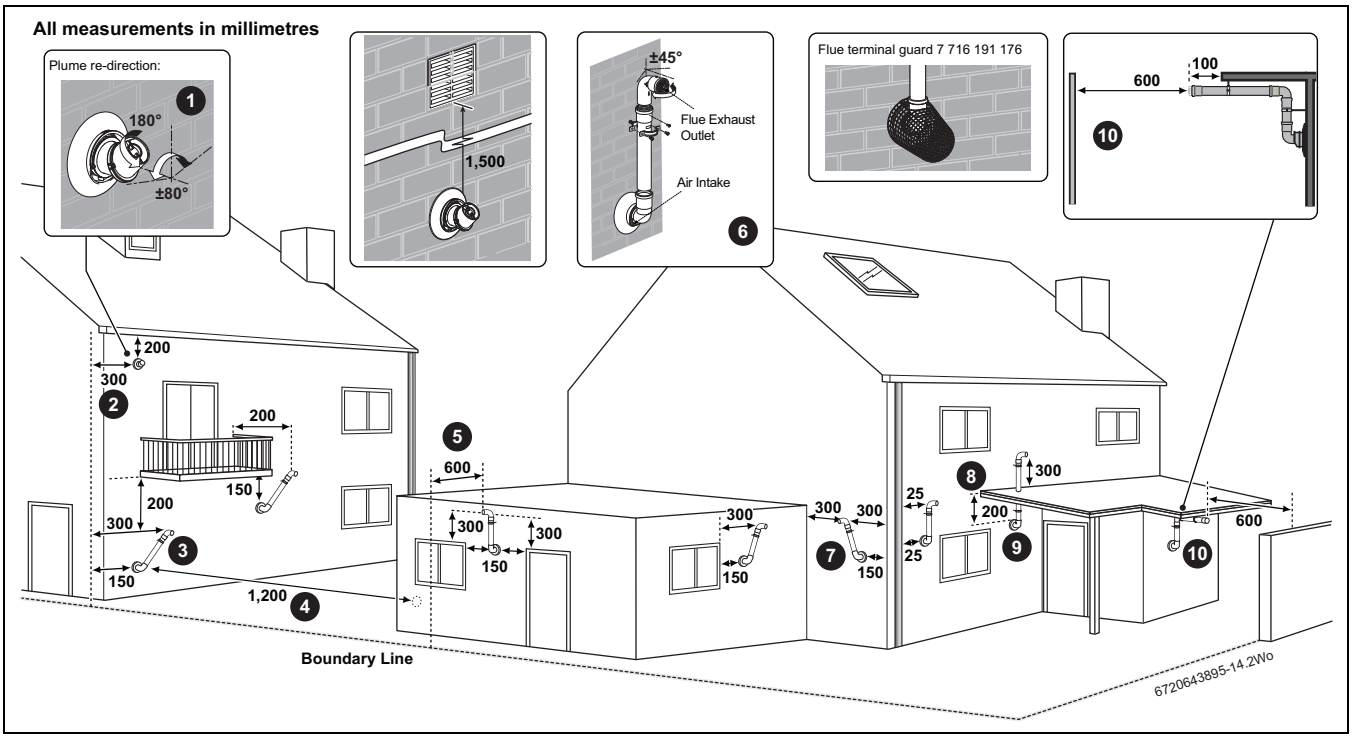

Fig. 21 Plume terminal positions

Maximum and minimum plume management lengths:

- A minimum distance of 500mm must be maintained between the plume management outlet and the flue air intake.
- The maximum plume management length is 4.5 metres for the appliances detailed on the front of this manual.
- The 45° bend is equivalent to 0.75 metres of straight plume management and the 90° bend is equivalent to 1.5 metres.

NOTICE:

- All measurements are the minimum clearances required.
- Refer to previous page for all concentric flue terminal positions unless the flue position is specified on the figure above "Plume terminal positions".
- Terminals must be positioned so to avoid combustion products entering the building.
- Support the flue at approximately one metre intervals and at a change of direction, use suitable brackets and fittings.

Key to illustration

1. This feature allows some basic plume re-direction options on a standard telescopic horizontal flue terminal.
   300mm minimum clearances to a opening e.g. window.
   However the minimum clearances to an opening in the direction that the plume management is facing, must be increased to 1,500mm.
   Where the flue is less than 150mm to a drainpipe and plume re-direction is used the deflector should not be directed towards the drainpipe.
2. 300mm adjacent to a boundary line.
3. Plume Management kit air intake can be reduced to 150mm providing the flue exhaust outlet is no less than 300mm adjacent to a boundary line.
4. 1,200mm between terminals facing each other.
5. 600mm distance to a boundary line, unless it will cause a nuisance. BS 5440:Part 1 recommends that care is taken when siting terminal in relation to boundary lines.
6. Using a Plume Management kit the air intake measurement can be reduced to 150mm providing the flue exhaust outlet has a 300mm clearance. The initial horizontal run from the terminal elbow must have a minimum 10° fall back, (stop tabs in the elbow prevent less than 10°) to the appliance for proper disposal of condensate. Any further horizontal runs can be 3°.
   – For details on specific lengths see relevant appliance Technical & Specification information.
7. Internal/external corners. The air intake clearance can be reduced to 150mm providing the flue exhaust outlet has a 300mm clearance.
8. Clearances no less than 200mm from the lowest point of the balcony or overhang.
9. 1,200mm from an opening in a car port on the same wall e.g. door or window leading into the dwelling.
10. 600mm distance to a surface facing a terminal, unless it will cause a nuisance. BS 5440: Part 1 recommends that care is taken when siting terminals in relation to surfaces facing a terminal.

Note:

- Installations in car ports are not recommended.
- The flue cannot be lower than 1,000mm from the top of a light well due to the build up of combustion products.
- Dimensions from a flue terminal to a fanned air inlet to be determined by the ventilation equipment manufacturer.

4.10.1 Determine the plume management system length

Note: Measurement M plume length
- ▶ M must be a minimum of 500mm and must not exceed 4,500mm for a 60mm plume management system used with the horizontal Ø 60/100mm flue.

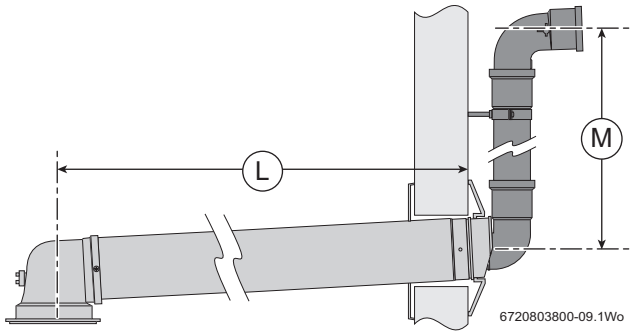

Fig. 22 Effective lengths L and M

Minimum plume management length

The minimum plume length should be calculated to ensure that the air inlet and exhaust have a minimum distance of 500mm between them (→ figure 23).

The plume management can be in any configuration, within the parameters of the plume management installation instructions, as long as it does not terminate inside the shaded area.

WARNING: Minimum plume management length.
The minimum distance of 500mm must be maintained between air inlet and exhaust.
- ▶ Do not terminate the plume management inside the shaded area shown in figure 23

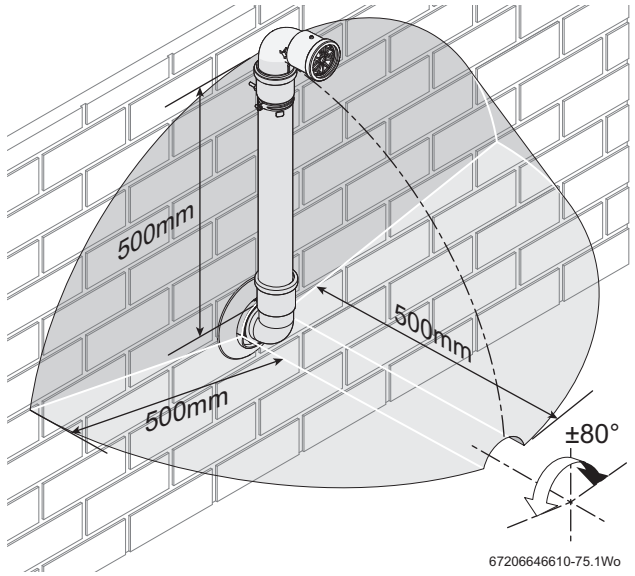

Fig. 23 Terminal exclusion zone

NOTICE: Cutting the 500mm pipe
If the 500mm plume management pipe kit is cut, an additional elbow will be required to join the pipework.
- ▶ The Plume management extension kit contains the components required for such a configuration.

Maximum plume management length

The Greenstar Ri range appliances can use up to 4,500mm of plume management regardless of flue length.

5 INSTALLATION

WARNING: All the previous "Pre-Installation" sections must be read and the requirements met before starting boiler or flue installation.

5.1 UNPACKING THE WALL FRAME & ANCILLARY ITEMS

CAUTION: LIFTING AND CARRYING
- ▶ Only lift a manageable weight, or ask for help.
- ▶ Bend the knee and keep the back straight with feet apart, when lifting or putting down heavy objects.
- ▶ DO NOT lift and twist at the same time.
- ▶ Lift and carry object close to the body.

Do not use the pre-formed water pipes on the gas supply, they must only be used for water.

Remove the straps and open the top of the boiler packaging.

1. Remove the two 22mm water pipes (1)
2. Remove the following items:
   - Wall mounting plate (2).
   - Wall mounting template and bottom panel (3).
   - Literature pack and pipe connectors and olives (4).
   - ErP label (5)

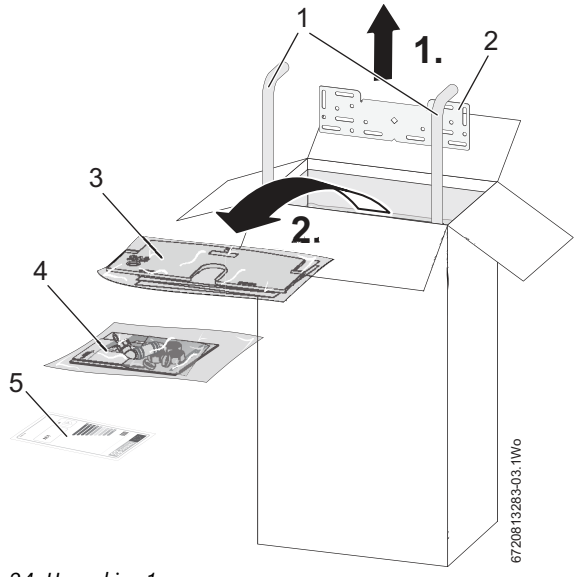

Fig. 24 Unpacking 1

3. Remove the top carton (5).
4. Remove the outer cardboard sleeve (6).
5. Remove the plastic cover (7).

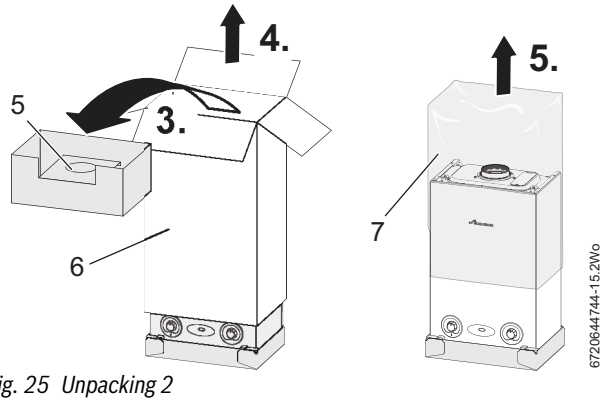

Fig. 25 Unpacking 2

- ▶ Flatten the outer cardboard sleeve and place on the floor behind the boiler.
- ▶ Lay the boiler on its back on the cardboard.
- ▶ Remove the bottom tray.

IMPORTANT HANDLING INSTRUCTIONS:

- It is advised that two people are used to carry the carton from the van to the point of delivery.
- Once the carton has been delivered, remove the outer carton. Care should be taken when releasing the straps. If a sharp implement is used, ensure the outer carton is not pierced and that the implement is used in such a way that it will not cause personal injury.
- All sharp objects must be covered or the blade retracted after use and put away in a safe place. The wall mounting frame, Installer pack, template and bottom panel can now be removed. Care should be taken when lifting the boiler from the base and the proper technique for safe lifting of any heavy object must be strictly observed.

Additional requirements for roof space installation:

- The boiler must be unpacked before ascending the steps to loft space.
- Two sets of steps should be used.
- Two people should share the lifting of the boiler up to the loft hatch, where the boiler is entered into the loft space, tilted, and slid on its back into the loft.
- Once the appliance is removed from its packaging check the contents against the packing list.

Before installing the appliance, ensure that the system has been cleaned as explained on page 11.

5.2 WALL MOUNTING TEMPLATE & FLUE OPENING

WARNING: BEFORE DRILLING, ENSURE THAT THERE ARE NO PIPES, ELECTRICAL CABLES, DAMP PROOF COURSES OR OTHER HAZARDS.

SAFETY:

All relevant safety precautions must be undertaken. Protective clothing, footwear, gloves and safety goggles must be worn as appropriate.

FIXING THE MOUNTING FRAME:

- ▶ The boiler template shows the relative positions of the flue and the top and bottom fixing of the mounting frame.

1. Fix the template to the wall in the desired position.
2. Drill four holes for the wall mounting frame through the template. Drill two holes for the bottom fixing screws.

The template has been sized to allow for minimum clearances of 5mm sides, 200mm base and 30mm above a 100mm diameter flue elbow.

REAR FLUE OUTLET

- ▶ The drawing opposite shows the boiler template with the flue centre lines of both the 100mm and 125mm flue systems.

3. Mark centre line of flue to be used (3); the external diameter of the hole can also be marked if required.

- ▶ If a 100mm diameter flue is to be used, a 125mm diameter hole is required. However, if using the weather sealing collar by pushing it through from inside the property, then a 150 mm diameter hole is required to accommodate this.
- ▶ The flue turret of the 100mm flue has an in-built 3° angle.
- ▶ If extensions are to be added then the complete flue must rise at an angle of 3°.
- ▶ The 125mm diameter flue system will require the flue to rise at an angle of 3°.
- ▶ Drill hole using a core drill or similar.

SIDE OUTLET:

4. Mark from the centre line of the wall template to the wall which the flue will pass through (4).

- ▶ Allow for a rise of 52mm per metre length of flue, to give a 3° angle.
- ▶ Clear any debris from the site.

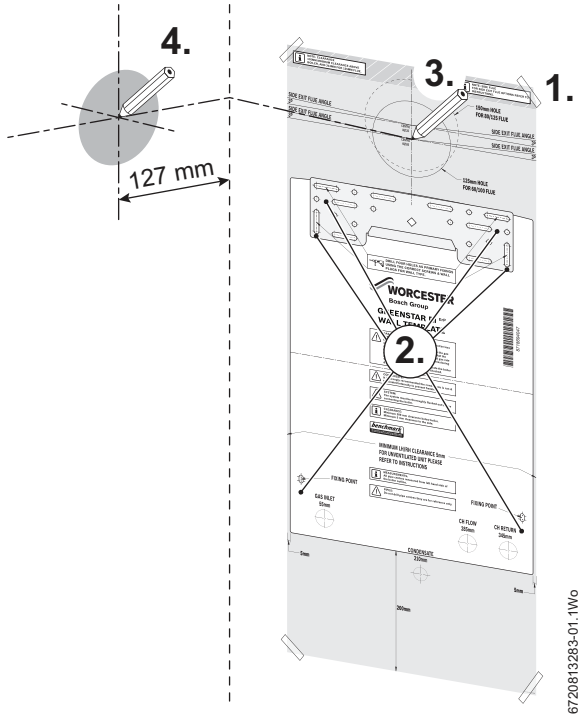

Fig. 26 Marking the flue position

5.3 OUTER CASE REMOVAL

1. Undo the two captive screws securing boiler casing at the bottom of the appliance.
2. Undo the two screws securing boiler casing at the top of the appliance.
3. Pull case upwards.
4. Remove cardboard packing piece from appliance.

With the outer case removed the appliance is suitable for a one man lift (<25kg).

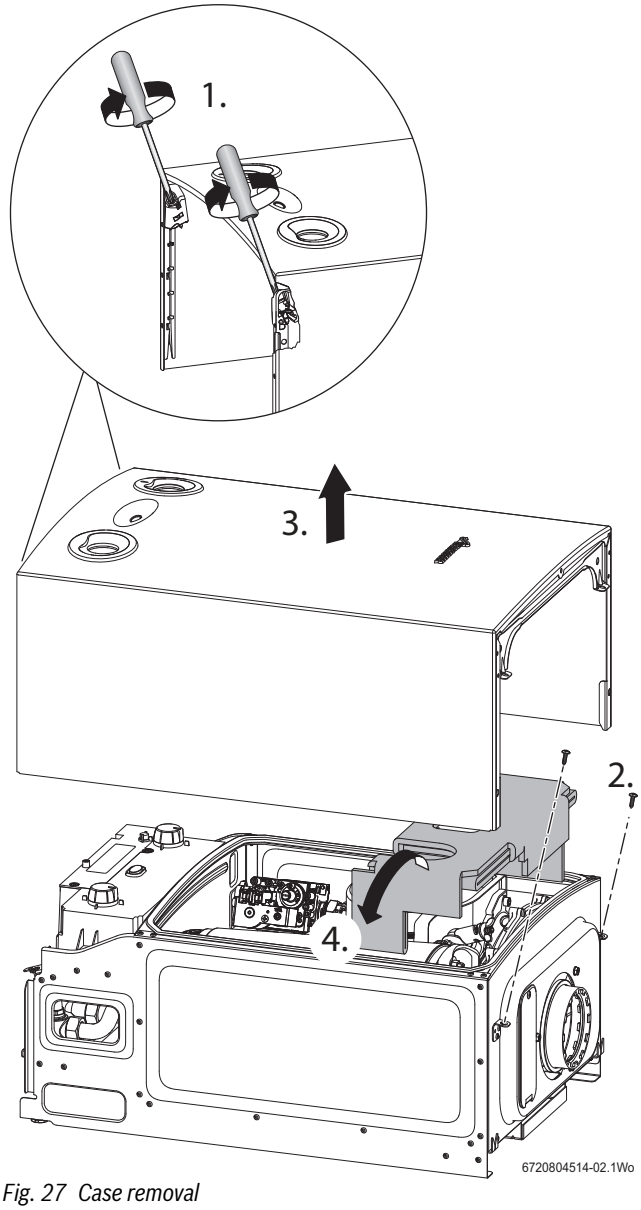

Fig. 27 Case removal

5.4 BOILER CONNECTION

CAUTION:
- ISOLATE THE MAINS GAS SUPPLY BEFORE STARTING ANY WORK AND OBSERVE ALL RELEVANT SAFETY PRECAUTIONS.

WARNING:
- Caps fitted to pipes must be removed before hanging the boiler

GAS AND WATER CONNECTIONS:

- Remove wall mounting template and secure the wall mounting frame to the wall with the appropriate fittings for the boiler weight and wall type.
- If there is greater than 600mm clearance below the appliance it is possible to fit the flow and return pipes, supplied, with the boiler installed on the wall.
- If clearance is less than 600mm below the appliance it may be necessary to fit the flow and return pipes before hanging the appliance.

The copper pipes supplied with the boiler are not to used for the gas supply.
These copper pipes are for water only.

NOTICE:
- Lift the boiler using the handling holes at either side of the frame.
  Do not lift the boiler by the air gas manifold or control box.

System pipes may be run vertically up behind the boiler or below it.

NOTICE:
- If pipes require reducing in length this is best done before they are fitted to the boiler.

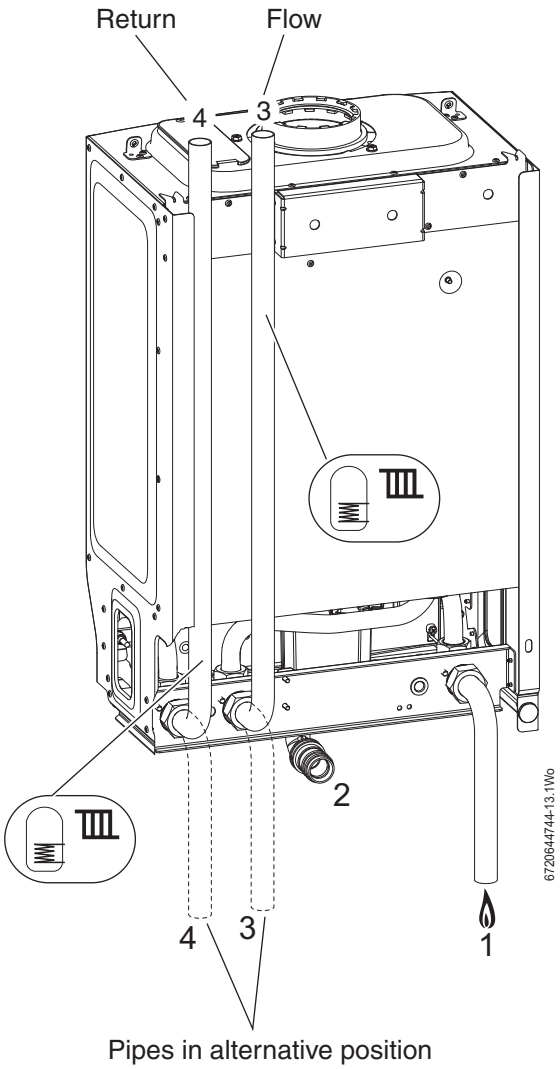

Fig. 28 Plumbing manifold

[1] Gas inlet (22mm)
[2] Condensate
[3] Flow (22mm)
[4] Return (22mm)

- ▶ Lift the boiler onto the wall plate.
- ▶ Level vertically using the feet (1) at the bottom rear of the boiler casing.
- ▶ Fit retaining screws through the holes (2) in the boiler frame to secure the boiler.
- ▶ Make connections to the heating system pipes.

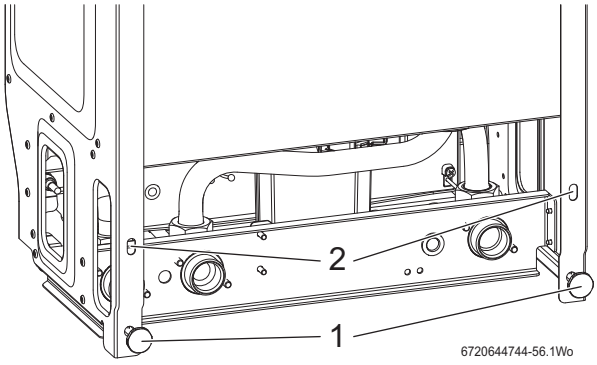

Fig. 29 Levelling and securing detail

5.4.1 CONDENSATE CONNECTION

Never terminate or discharge into any open source, including; sink, bath, shower, bidet, toilet etc.

NOTICE: Condensate disposal

- ▶ Follow the recommendations given in section 4.4 “Condensate pipe work” for all condensate disposal installation.
- ▶ Ensure that the condensate pipe work falls at least 50mm per metre towards the outlet.
- ▶ * Do not use solvents, adhesive or lubricant when pushing the pipe onto the rubber connector.

Figure 31 gives the pipe work dimensions with respect to the mounting surface.

When using the pre-formed water pipes provided with the boiler, offset the water pipes connecting to them by 5mm to enable pipe clamps to be fitted.

A sealing washer (1) and 22mm adaptor (2) are supplied in the fitting pack

1. Fit washer (1) inside the plastic nut and attach firmly to the connection on the syphon.
2. Connect the condensate disposal pipe work to the elbow (2), refer to figure 31 and insert the condensate pipe 25mm into the elbow.

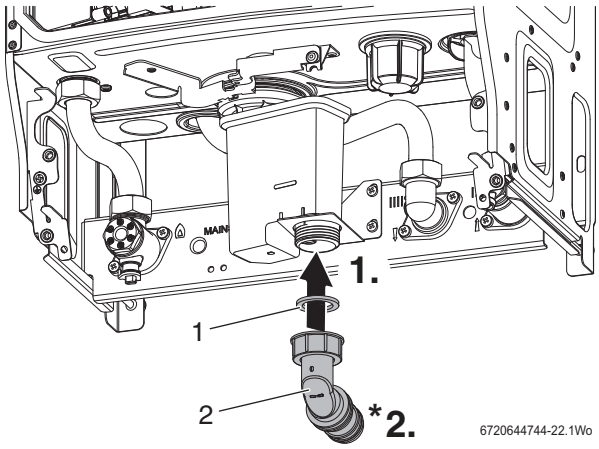

Fig. 30 Condensate connections

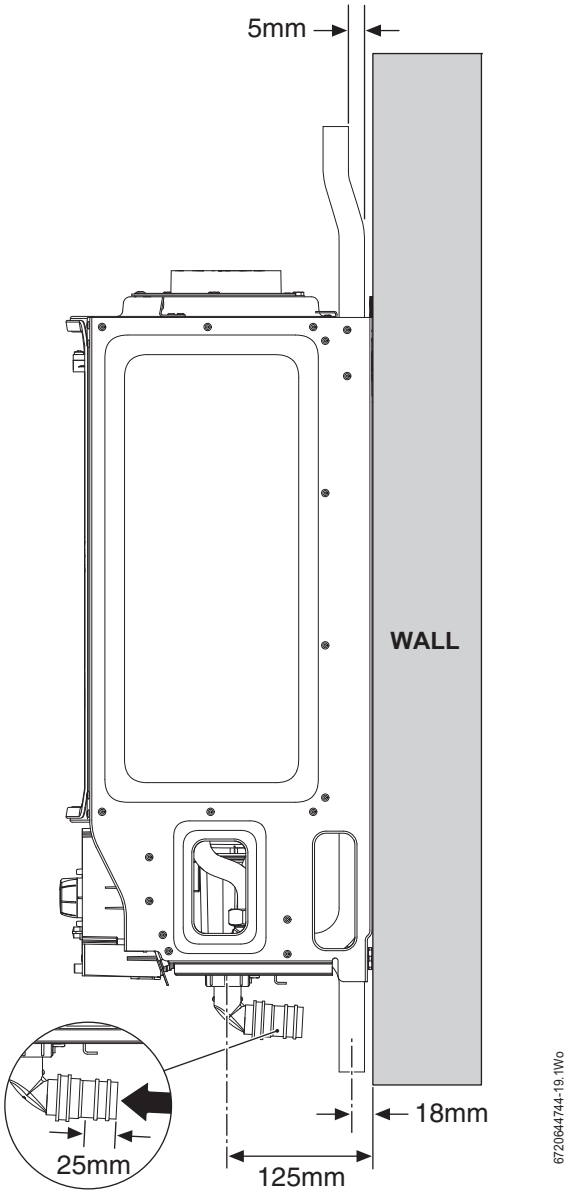

Fig. 31 Pipe work dimensions

5.5 Flue turret/adaptor installation

The flue turret/adaptor for the appliance is secured using three retaining screws (figure 32, item [1]) which come in position on the appliance.

To ease assembly of flue components, apply silicone lubricant to sealing surfaces.
Refer to the manual supplied with the flue kit for complete installation instructions.
For plume management effective lengths and the effective flue lengths, refer to details in section 4.8.

Refer to figures 32 & 33.

- ▶ Remove the three inner flue tube retaining screws [1].
  The inner tube will be held in place in the appliance.
- ▶ Check the appliance flue seal [2] is correctly seated and apply silicone grease.

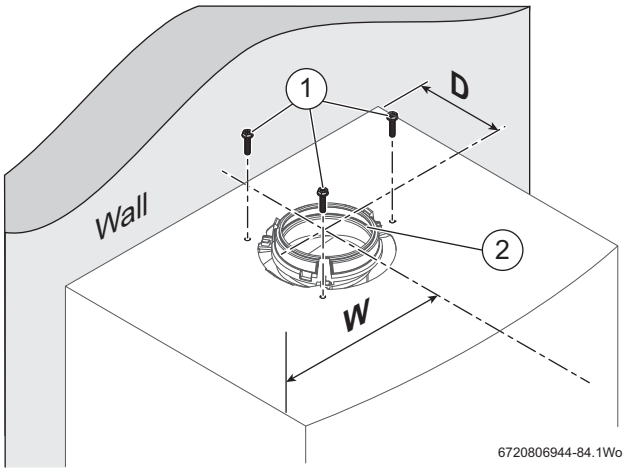

Fig. 32 Flue turret centre

[D] 127mm
[W] 195mm

- ▶ Align the flue turret/vertical adaptor to the appliance flue outlet with flat facing [3] to the rear of the appliance.
  The flue turret/adaptor should be pushed straight down, on to the appliance.
- ▶ The three inner flue tube retaining screws [1] are, re-used for the flue turret and replacement retaining screws [4] supplied with the adaptor kit are used to secure turret/adaptor to the appliance.

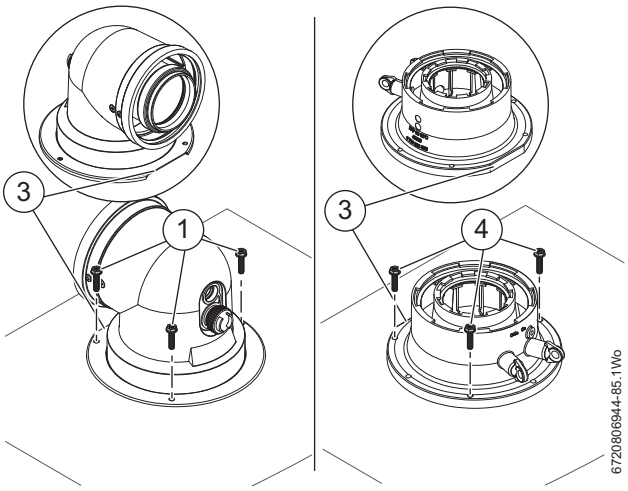

Fig. 33 Flue turret/adaptor connection

Additional notes and reminders:

- Ensure that all cut lengths are square and free from burrs.
- Ensure that the flue and seals are not damaged.
- The flue is sealed when assembled correctly, the components are pushed fully home and secured.
- The flue is set at an angle of 3° or 52mm per metre length.
- Support the flue at approximately one metre intervals and at a change of direction, use suitable brackets and fittings (flue bracket 100mm part number: 7 716 191 177, flue brackets 100mm x 6 part number: 7 716 191 178, flue bracket 125mm part number: 7 716 191 179)

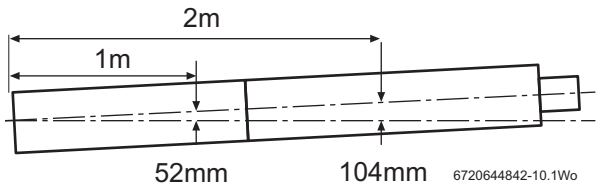

Fig. 34 Slope for condensate disposal

5.6 ELECTRICAL CONNECTIONS

CAUTION: Isolate the mains electrical supply before starting any work and observe all relevant safety precautions.

The boiler is already wired with a mains supply cable. A spare strain relief block is supplied in case the pre-wired cable is replaced.1

- ▶ The mains supply to the boiler and system wiring centre must be common, and through either a fused double pole isolator or a fused three pin plug and unswitched socket.
- ▶ The isolator/socket, where practicable, should be situated next to the boiler.
- ▶ The isolator must have a contact separation of 3mm minimum in both poles.
- ▶ Any system connected to the boiler must not have a separate electrical supply.
- ▶ External fuse rating 3A.

ACCESS TO ELECTRICAL CONTROL PANEL:

- ▶ Remove boiler casing to access control panel.

1. Unscrew the three screws in the control panel.
2. Remove the connections cover.

- ▶ Unclip cable clamp.
- ▶ Cut off the tapered cable entry to fit cable diameter required.
- ▶ Turn cable retaining screw anti-clockwise
- ▶ Run cable through the hole in the main crossbar marked “mains cable” and through the cable clamp, ensure there is ample cable to reach the connectors.
- ▶ Turn cable clamping screw clockwise to secure cable and replace clamp into control panel.

3. Mains power 230v connection (ST1):
   - Separate wires from cable end and strip to 6mm
   - Connect LIVE wire to terminal (L)
   - Connect NEUTRAL wire to the terminal (N)
   - Connect EARTH wire to earth bracket
4. External Pump (ST2): Max power 90 W
   - Connect NEUTRAL wire to terminal (Np)
   - Connect LIVE wire to terminal (Lp)
   - Connect EARTH wire to earth bracket
5. Boiler Demand (from external wiring centre) (ST2):
   - Connect SWITCHED LIVE wire to terminal (LR).

NOTICE: SYSTEM PUMP
- ▶ THE SYSTEM PUMP MUST BE CONNECTED TO THE APPLIANCE FOR THE PUMP OVER-RUN FUNCTION.

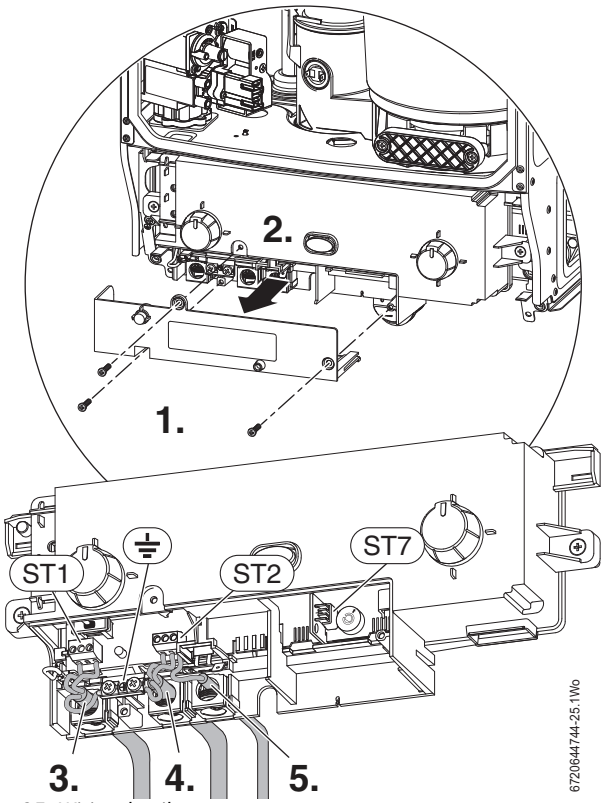

Fig. 35 Wiring detail

NEW COMPLETE SYSTEM INSTALLATIONS

If a new complete heating system is installed in a new build property or it is a first time installation in an existing property, the heating systems must conform to current building regulations Part L1a.

The exception to this are single storey, open plan dwellings where the living area is more than 70% of the total usable floor area. Then this type of dwelling can be controlled as one zone.

An alternative would be individual electronically controlled TRVs.

For dwellings with a floor area over 150m^2, separate time and temperature control for each zone is required. All radiators must have TRVs fitted in all rooms except bathrooms and rooms with thermostats.

EXISTING INSTALLATIONS

For boiler replacements on an existing system, it is not necessary to zone the upstairs and downstairs differently, compliance with the zone requirements can be achieved by a single room thermostat or programmable room thermostat.

While the system is drained down, TRVs must be fitted to all rooms except the bathrooms and the room with the thermostat.

EXTERNAL WIRING CENTRE

System components wired into terminal strip in accordance with system manufacturers instructions.

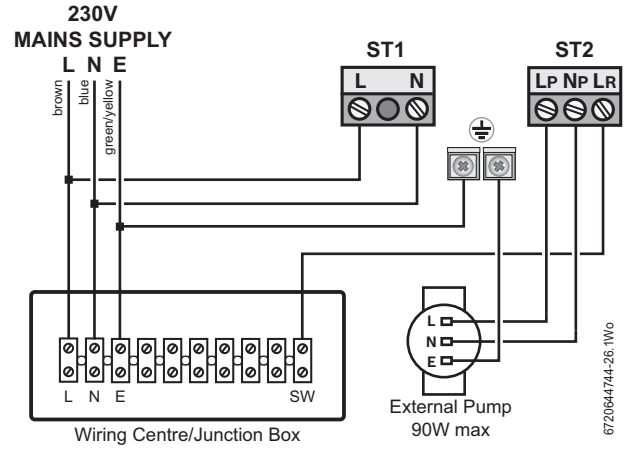

Fig. 36 External wiring centre

Refit electric control panel covers:

▶ Refit panel and secure with screws.

6 COMMISSIONING

6.1 PRE-COMMISSIONING CHECKS

WARNING: ELECTRIC SHOCK

▶ ISOLATE THE MAINS SUPPLIES BEFORE STARTING ANY WORK AND OBSERVE ALL RELEVANT SAFETY PRECAUTIONS

▶ Check that the gas service pipe and water pipes are connected to the correct position on the manifold.

1. Gas inlet (22mm)
2. Flow (22mm)
3. Return (22mm)

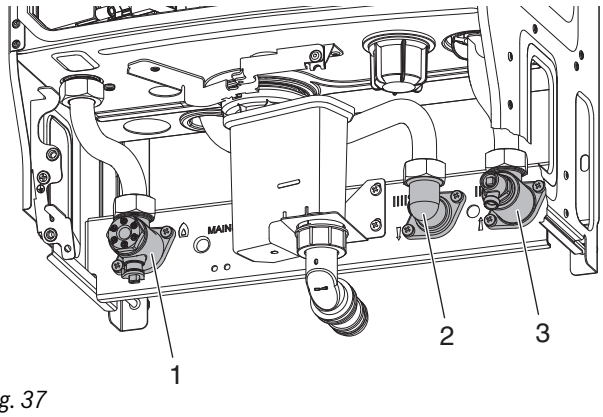

Fig. 37

▶ Check the gas type specified on the identification plate (1) matches that of the gas supply.

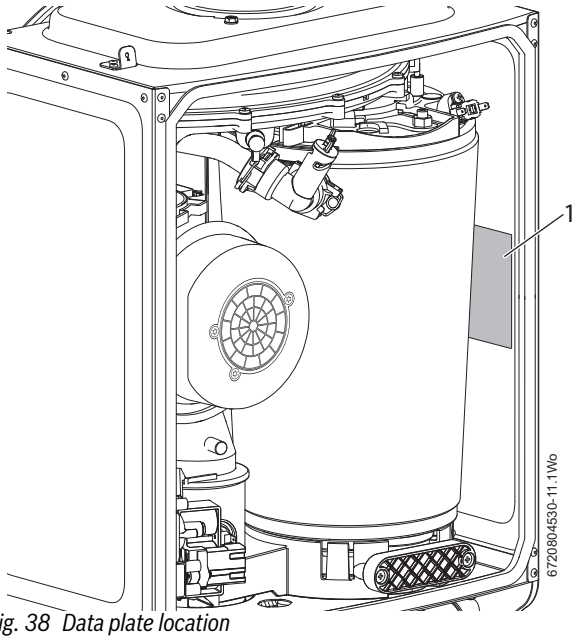

Fig. 38 Data plate location

▶ Turn on the main gas supply, check the gas pipe work, connections and rectify any leaks.

NOTICE: Do not use solvents, adhesive or lubricant when pushing the pipe onto the rubber connector.

▶ Check that the condensate pipe has been connected to the syphon.

▶ Ensure that the condensate pipe has been inserted at least 25mm into the elbow

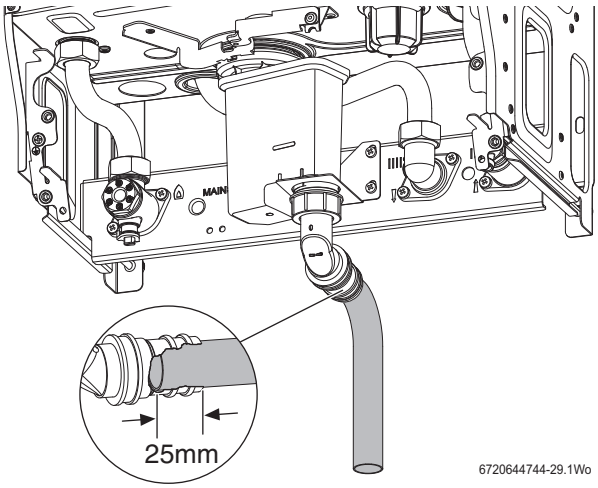

Fig. 39 Condensate connection

If the boiler is not to be commissioned immediately then, after successfully completing all of the checks and any rectification work, shut off the gas and water supply and electrically isolate the boiler.

6.2 FILLING THE SYSTEM

Open vented systems:

- ▶ Ensure all system and boiler drain points are closed.
- ▶ Open all radiator valves.
- ▶ Turn on the water supply to the system header tank and allow the system to fill.

Sealed systems:

- ▶ Fill the system via a WRAS approved filling loop to 1 bar then turn the valve anti-clockwise to close.

Opened vented and sealed systems:

- ▶ Vent (1) any air from the boiler heat exchanger using a suitable container to collect any water. Ensure tube outlet (2) is directed away from the fan or any other electrical component to prevent any water damage. Also place a suitable cover over the fan to prevent any spillage of water on to electrical connections. Ensure the cover is removed after venting.

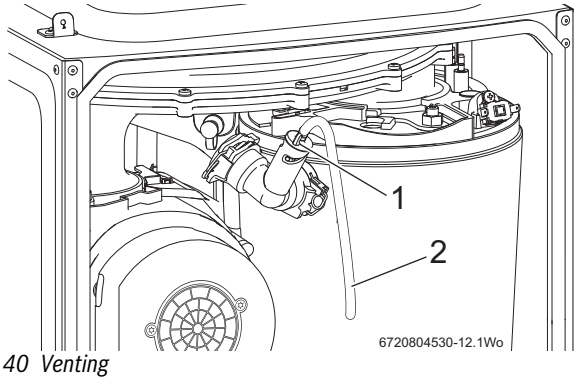

Fig. 40 Venting

- ▶ Vent all radiators and the primary side of the hot water cylinder, tighten when completed and check the system and correct any leaks.

Sealed systems only:

- ▶ If required increase system pressure back to 1 bar.
- ▶ Isolate and remove filling loop connection to system.

6.3 WATER TREATMENT

NOTICE:

- ▶ ARTIFICIALLY SOFTENED WATER MUST NOT BE USED TO FILL THE CENTRAL HEATING SYSTEM.

It is possible to have an ion exchange water softener fitted to the cold water system of the property. However, the boiler requires an untreated cold water connection taken from the mains supply, before the water softener, to the primary water filling point of the heating system.

Alternatively there are water softening/treatment devices that do not adjust or alter the pH levels of the water. With these devices it may not be necessary to provide an untreated water by-pass to the primary water filling point of the heat system.

ENSURE THAT THE SYSTEM HAS BEEN CLEANED AS ON PAGE 11 OF THESE INSTRUCTIONS.

FLUSHING (Central Heating):

- ▶ Switch off the boiler.
- ▶ Open all drain cocks and drain the system while the appliance is hot.
- ▶ Close drain cocks and add a suitable flushing agent at the correct strength for the system condition in accordance with the manufacturer's instructions.
- ▶ Run the boiler/system at normal operating temperature for the time stated by the manufacturer of the flushing agent.
- ▶ Drain and thoroughly flush the system to remove the flushing agent and debris.

INHIBITOR (Central Heating):

- ▶ Check drain cocks are closed and all radiator valves are open before adding a suitable inhibitor compatible with aluminium (or combined inhibitor/anti-freeze if the system is exposed to freezing conditions) to the heating system water in accordance with the manufacturers instructions.

The pH value of the system water must be less than 8 or the appliance warrantee will be invalidated.

- ▶ Fill system as described in section 6.2 opposite.
- ▶ Set all controls to maximum.
- ▶ Record the date when the inhibitor was added to the system on the warrantee card.

NOTICE:

- ▶ The concentration of inhibitor in the system should be checked every 12 months or sooner if system content is lost.
- ▶ Normally the addition of sealing agents to the system water is not permitted as this can cause problems with deposits left in the heat exchanger.
- ▶ In cases where all attempts to find a micro leak have failed, Worcester, Bosch Group supports the use of Fernox F4 leak sealer.

WATER TREATMENT PRODUCTS

Suitable water treatment products can be obtain from the following manufacturers:

FERNOX	0870 601 5000 or www.fernox.com
SENTINEL	0800 389 4670 or www.sentinel-solutions.net

6.4 STARTING THE APPLIANCE

CAUTION: RUNNING THE APPLIANCE

- ▶ Never run the appliance when the appliance/system is empty or partially filled.

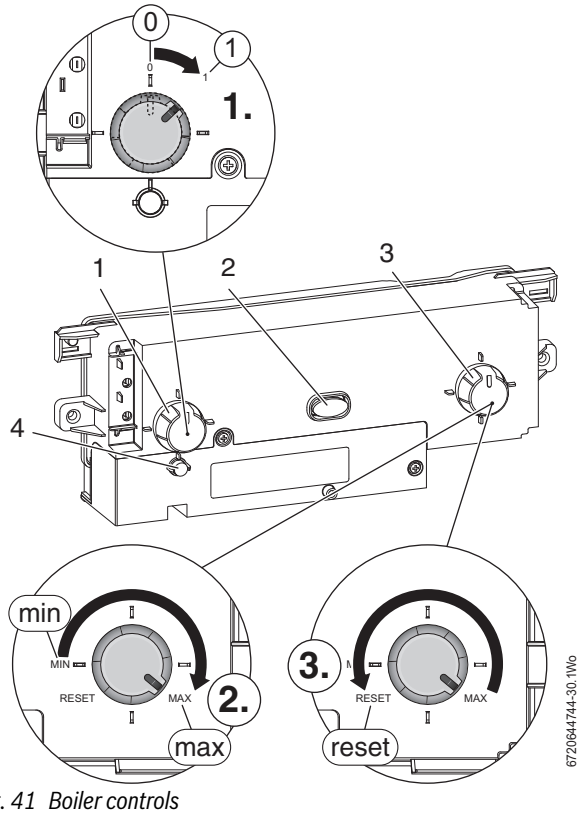

Fig. 41 Boiler controls

Switching the appliance ON/OFF:

- ▶ Turn on mains power, the power ON indicator (2) illuminates BLUE.
- ▶ Turn on any external controls
- ▶ Set the thermostatic radiator controls to maximum temperature
- ▶ Set the clock/programmer to continuously ON and the room thermostat to maximum temperature

1. Turn Power ON/OFF knob (1) from 0 (OFF position) to I (ON position), after two seconds the Power ON indicator (2) illuminates.

1	Power ON/OFF knob
2	Power ON and fault indicator (Blue)
3	Central heating temperature control
4	Burner indicator (Green)

Table 28 Control panel legend

2. Turn the boiler CH temperature control (3) to maximum. The burner on indicator (4) illuminates GREEN when the burner has lit.

- ▶ If the boiler fails to light and the boiler goes to flame lock-out, the BLUE power indicator (2) will flash.

NOTICE: RESET

- ▶ Do not press the blue power indicator to reset the boiler.

3. To reset the lockout turn the boiler thermostat control to minimum, then passed minimum where the control knob will click at reset position, wait 5 seconds then turn to maximum. The boiler will be reset.

6.5 COMMISSIONING

NOTICE: The combustion settings on this gas-fired boiler have been checked, adjusted and preset at the factory for operation on the gas type defined on the data plate. No measurement of the combustion values is necessary provided there is a meter installed allowing the gas rate to be checked.
DO NOT ADJUST THE AIR/GAS RATIO VALVE.

Having checked:

- ▶ That the boiler has been installed in accordance with the installation instructions.
- ▶ The integrity of the flue system and flue seals, as described in section 7.3 of this manual.
- ▶ The integrity of the boiler combustion circuit and relevant seals.

6.5.1 CHECKING THE GAS INLET PRESSURE

The inlet pressure to the appliance must be checked using the following procedure:

MEASURING THE INLET PRESSURE

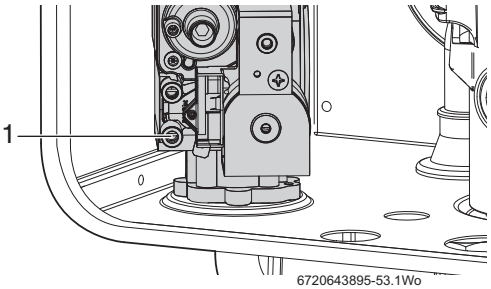

Fig. 42 Inlet pressure test point

- ▶ Close gas isolation valve.
- ▶ Slacken the screw in the inlet pressure test point (1) and connect a manometer.
- ▶ Open gas isolation valve.
- ▶ Measure the pressure with the boiler running at maximum.
  - – Refer to section 7.4 to set the boiler to maximum output.
  - – The boiler will stay at maximum for 15 minutes.
  - – Return the boiler to normal after the checks.
- ▶ Check the gas supply working pressure at the gas valve conforms to values shown in Fig. 43 or Fig. 44 .

GAS PRESSURE WITHIN THE SYSTEM

Refer to the figures below for natural gas or L.P.G gas pressures.

The pressure at the boiler must not be less than the pressure read at the meter minus:

- 1mbar for Natural Gas
- 2.5mbar for L.P.G.

The pressure drop from the meter to the gas valve must not be more than:

- 2.5mbar for Natural Gas
- 4mbar for L.P.G.

If the pressure drops are greater than shown below, then this would indicate a problem with the pipe work or connections within the system.

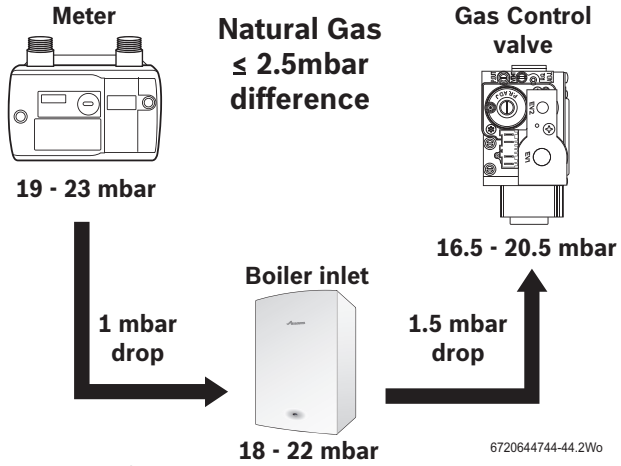

Fig. 43 Natural gas pressures

≤	Equal to or less than .....

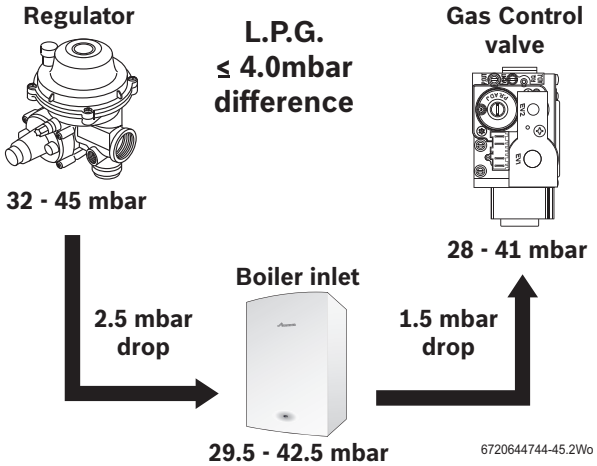

Fig. 44 L.P.G. pressures

NOTICE:
Do not continue commissioning until the correct gas pressure is achieved.

6.5.2 CHECKING THE GAS RATE

- ▶ The gas rate should be measured at the gas meter after 10 minutes operation at maximum.
  See technical data section at the front of this manual.
- ▶ Where a gas meter is not available (e.g. L.P.G.) the CO/CO_2 must be checked to the units shown in the setting of the air/gas ratio, refer to section 7.6.
- ▶ If pressure and gas rate are satisfactory press the service button and the boiler will return to normal operation.
  - – If left in the service mode the control will return to normal operation after 15 minutes.
- ▶ Close the gas isolation valve.
- ▶ Remove the manometer.
- ▶ Re-seal the screw in the gas inlet pressure test point.
- ▶ Open the gas isolation valve.
- ▶ Ensure that there are no gas leaks.
- ▶ Replace the outer case.

6.6 CO AND COMBUSTION CHECKS

The following combustion and flue integrity checks are mandatory from April 2014 and these values must be recorded on the Benchmark check list, at the back of this manual.

Once the gas rate and pressure have been confirmed as acceptable then the CO and combustion checks can be undertaken.
The flow chart is given for guidance, the details of the checks are given in the following sections:

- Checking flue integrity, refer to section 7.3, page 34
- Flue gas analysis, refer to section 7.5, page 35

NOTICE: BEFORE CO AND COMBUSTION CHECKS:

- ▶ Refer to section 6.5.1 and 6.5.2 to verify gas type, gas inlet pressure, and gas rate.
  Visually check the integrity of the whole flue system and confirm that all the components are correctly assembled, fixed and supported.
- ▶ The flue gas analyser must be the correct type as specified in BS 7967. Before use the analyser must have been calibrated as specified by the manufacturer.
  The installer must be competent in the use of the analyser.
  Check and zero the analyser in fresh air as specified by the manufacturer.
- ▶ The air/gas ratio valve is factory set and must not be adjusted during commissioning unless this action is recommended following contact with the Worcester, Bosch Group help line 0330 123 3366.

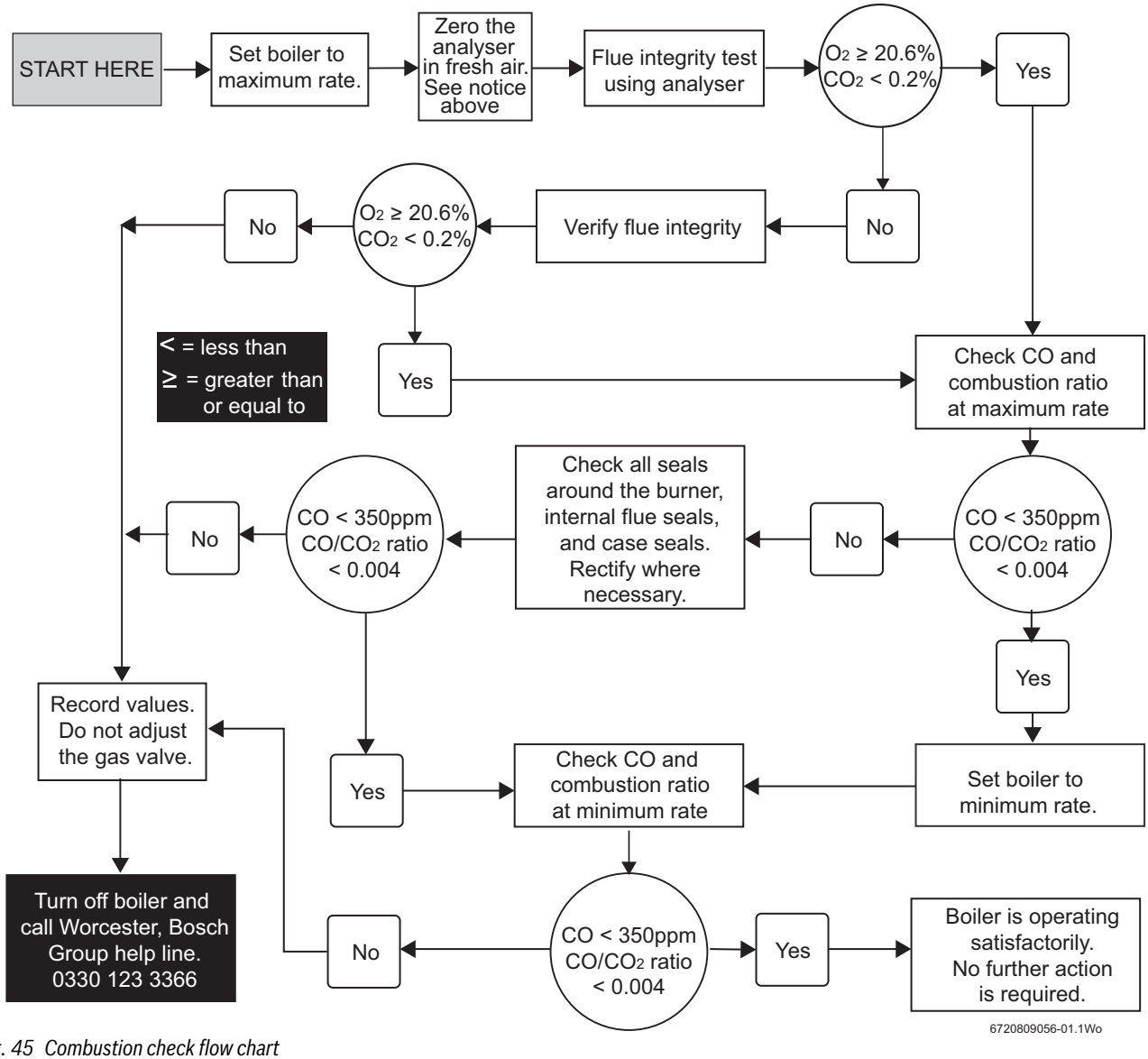

Fig. 45 Combustion check flow chart

6.7 FINISHING COMMISSIONING

6.7.1 REPLACE THE OUTER CASE:

Replace outer casing making sure that the securing points are properly located.

1. Replace top two screws.
2. Re-tighten bottom two screws.

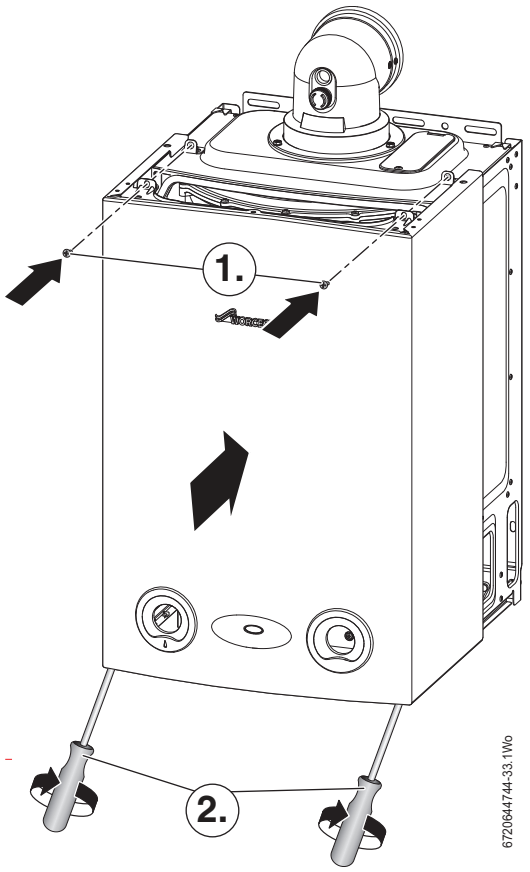

Fig. 46 Replacing outer case

6.7.2 INSTALL THE BOTTOM PANEL

The cut out in the bottom panel fits easily over the syphon elbow and outlet, however care should be taken not to disturb any sealed components.

1. Hook the lip at the back of the bottom panel over the angled edge at the base of the connections manifold.
2. Push up into position.
3. Secure in position the screw provided.

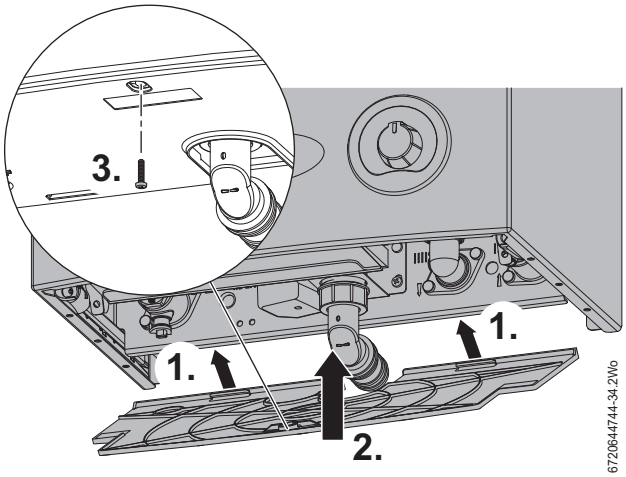

Fig. 47 Bottom panel

6.7.3 HAND OVER

- ▶ Open the fascia flap by hinging the flap downwards using the curved hand hold in the centre of the flap.
- ▶ Set up the controls and show the customer how to operate all the controls shown in the User Guide plus any external controls.
- ▶ Instruct the customer on:
  - how to use the TRVs.
  - how to reset the boiler.
- ▶ Show the customer the fault finding information in the User guide.
- ▶ Show the customer where the serial number/boiler information is when they call in with a problem (Benchmark checklist at the rear of the manual).
- ▶ Give the customer details of how to contact the installer/gas emergency numbers.
- ▶ Show the customer how to safely isolate the boiler
- ▶ Advise the customer where they can find information on the Worcester, Bosch Group website.
- ▶ Advise the customer that the varying external temperatures will affect the output of the boiler.
- ▶ Ensure that the User Guide and Installation, Commissioning and Service manual, with the Benchmark checklist and service record, is left with the boiler or homeowner.
- ▶ If the appliance is unused and exposed to freezing conditions, shut off all the mains supplies and drain the system and boiler, label accordingly.

6.7.4 Appliance guarantee

This appliance has a guarantee against faulty materials or workmanship for a period from the date of installation subject to the following terms and conditions:

- During the period of this guarantee any components of the appliance which are proven to be faulty or defective in manufacture will be exchanged or repaired free of charge by Bosch Thermotechnology Ltd.
- The householder may be asked to prove the date of installation, that the appliance was correctly commissioned and, where appropriate, the first year's service has been carried out to the satisfaction of Bosch Thermotechnology Ltd., when requested. These should be documented as a part of the Benchmark Checklist.
- The appliance has been used only for the normal domestic purposes for which it was designed.

This guarantee does not affect your statutory rights.

Guarantee registration

Your Greenstar appliance carries a guarantee against faulty material or manufacture subject to Terms and Conditions.
Guarantee Registration can be completed:

- On-line
  - You can register on our website: www.worcester-bosch.co.uk/guarantee
- By phone
  - You can register by ringing 0330 123 2552
- By post
  - Please send your completed form to: Worcester, Bosch Group, Cotswold Way, Warndon, Worcester, WR4 9SW.

To read the full Terms & Conditions please visit us on-line at www.worcester-bosch.co.uk/guarantee.
Your statutory rights are not affected by the manufacturer's guarantee.

7 SERVICE AND SPARES

7.1 INSPECTION AND SERVICE

CAUTION: TURN OFF THE GAS SUPPLY AND ISOLATE THE MAINS SUPPLIES BEFORE STARTING ANY WORK AND OBSERVE ALL RELEVANT SAFETY PRECAUTIONS.

NOTICE: COMPONENTS.
- ▶ After replacement of any components always check for gas tightness where relevant and carry out functional checks as described in Commissioning. Damaged O-rings or gaskets must be replaced.

NOTICE: Service work
- ▶ Service work must be carried out by a competent engineer, such as Gas Safe registered personnel!

NOTICE: FLUE GAS ANALYSER
- ▶ Service work must not be attempted if a flue gas analyser is not available.

- To ensure the continued efficient operation of the appliance it must be checked at regular intervals.
- The frequency of servicing will depend upon the particular installation conditions and usage however, an annual service is recommended.
- The extent of the service required by the appliance is determined by the operating condition of the appliance when tested by fully qualified engineers.
- The service interval record sheet at the rear of these instructions must be completed after each service.

INSPECTION

1. Check that the terminal and the terminal guard, if fitted, are clear and undamaged.
2. If the appliance is in a compartment or cupboard check that the specified service space around the appliance is clear.
3. Check all the joints and connections in the system and remake any that show signs of leakage.
   Refill and re-pressurise if applicable as described in Commissioning, section 6.2.
4. Operate the appliance and take note of any irregularities.
   Refer to Fault Finding on page 48 for rectification procedures.

COMPONENT ACCESS

Removing outer case

1. Undo and remove two screws securing boiler casing at the top of the appliance.
2. Undo but do not remove the two screws securing boiler casing at the bottom of the appliance.

▶ Pull case forward and remove.

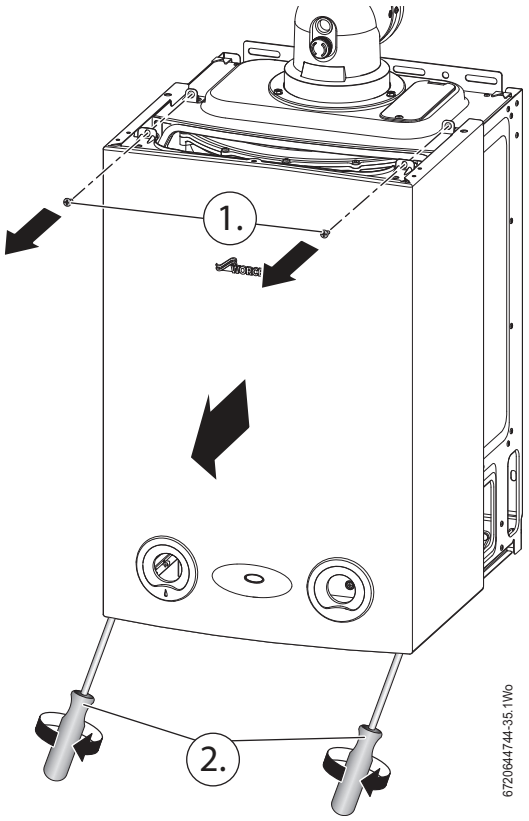

Fig. 48 Remove outer case

LOWERING THE BOILER CONTROLS TO THE SERVICE POSITION:

1. Remove two screws securing the control.
2. Pull the control forward.
3. Lower the control to align the slots at the top of the control with the lugs on the boiler framework.
4. Hang control on two lugs on boiler framework.

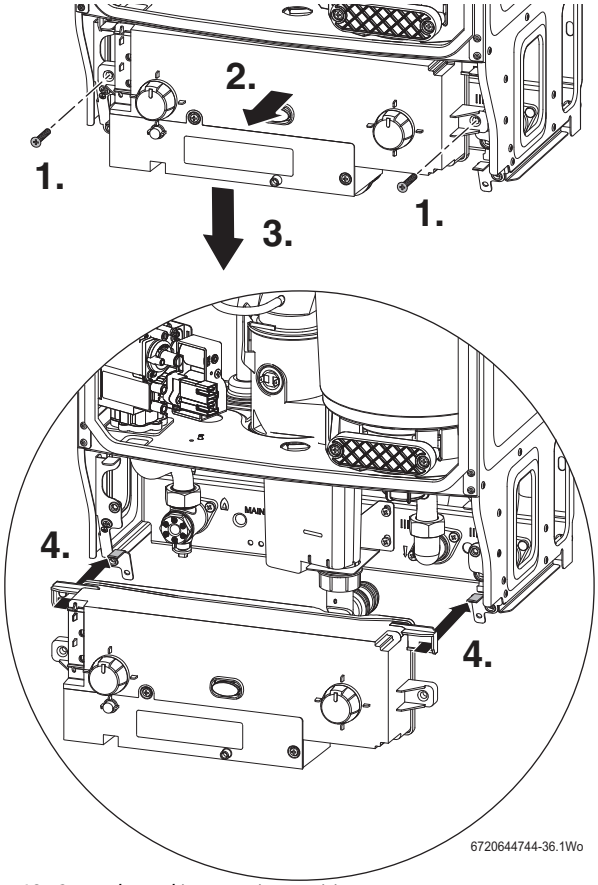

Fig. 49 Control panel into service position

7.2 CHECKING GAS INLET PRESSURE

Refer to section 6.5.1 for checking the gas inlet pressure

NOTICE:
- ▶ Do not continue with the other checks if the correct gas inlet pressure can not be achieved.

7.3 CHECKING FLUE INTEGRITY

The integrity of the flue system and performance of the boiler can be checked via the flue turret sample points.

Flue gas sample point	1
Air inlet sample point	2

Table 29 Key to figure 50

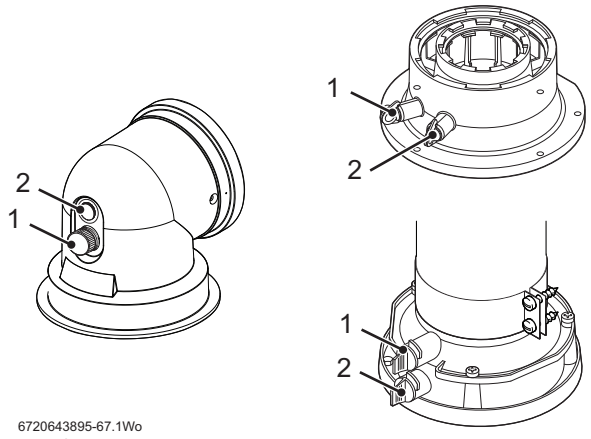

Fig. 50 Flue test points

- ▶ With the boiler case on and the boiler running at maximum.
- ▶ Insert the analyser probe into the air intake test point.
- ▶ Allow the readings to stabilise and check that:
  - O_2 is equal to, or greater than 20.6%
  - CO_2 is less than 0.2%
- ▶ If the readings are outside these limits then this indicates that there is a problem with the flue system or combustion circuit, e.g. missing or dislodged seals.

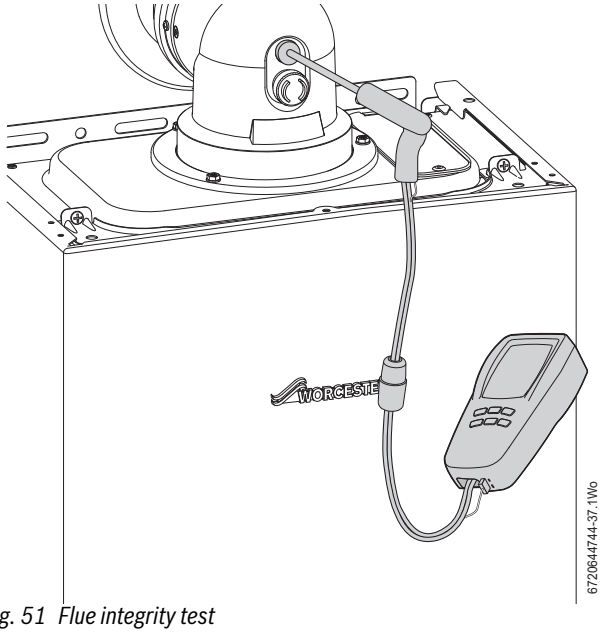

Fig. 51 Flue integrity test

7.4 FAN PRESSURE TEST

This test is to determine if the heat cell requires cleaning/attention.

SETTING THE BOILER TO MAXIMUM

1. Remove the three screws retaining the control cover.
2. Remove the control cover.
3. Remove the plastic tool clipped inside the cover.
4. Insert the tool into the switch.
5. Using the tool set the mode switch to maximum output.

Ensure the boiler is powered up and there is a demand from the external controls.

The power indicator will flash and the boiler will stay in this mode for 15 minutes if no further change is made to the switch.

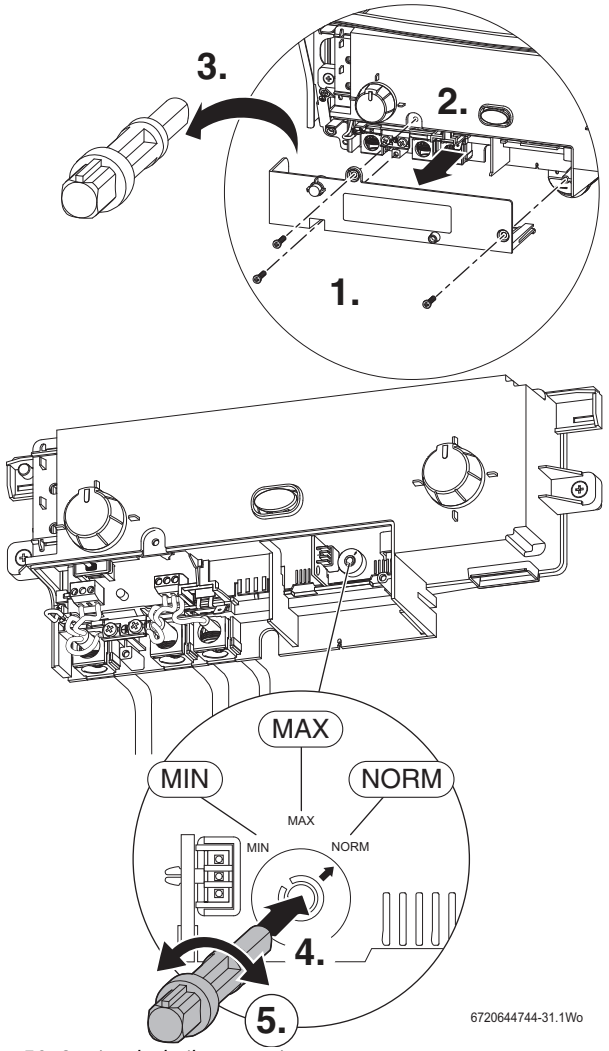

Fig. 52 Setting the boiler to maximum

FAN PRESSURE TEST

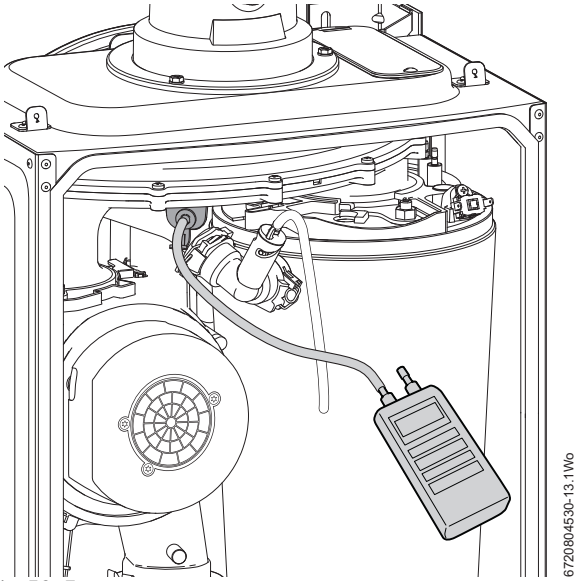

Fig. 53 Fan pressure test

- ▶ Remove the cover and connect a digital manometer to the fan pressure test point.
- ▶ The pressure will read negative, refer to the chart in figure 54.
- ▶ After measurement replace test point cover and return mode switch to normal.
- ▶ Replace the control cover.
- ▶ Replace outer case.

NOTICE:
The boiler must be run at maximum output for Fan Pressure test and the Flue Gas analysis.

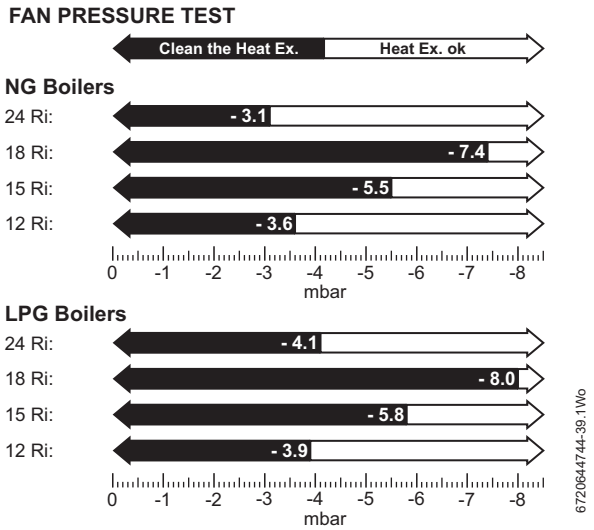

Fig. 54 Fan pressure readings

If the boiler fails the fan pressure test then before adjusting the air/gas ratio, try the following:

- ▶ Check the syphon is not blocked.

1. Remove the screws securing the sump cover.
2. Remove the sump cover.
3. Clean the sump with a suitable brush.

- ▶ Check the exhaust path and flue for restriction.
- ▶ Re-check the Fan Pressure readings

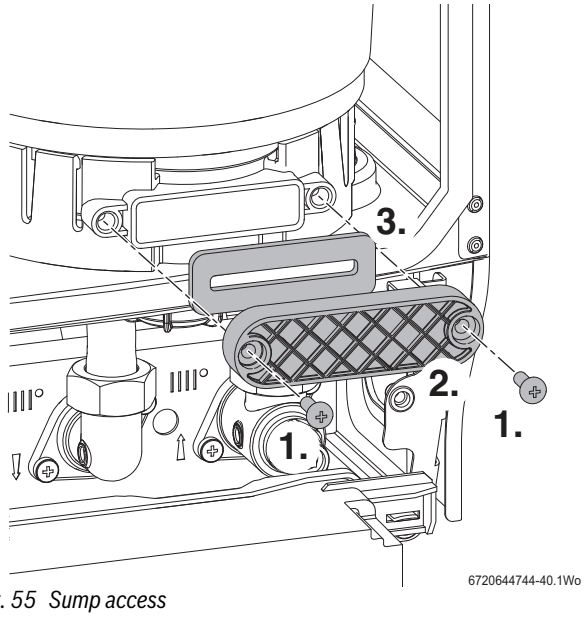

Fig. 55 Sump access

7.5 FLUE GAS ANALYSIS

COMBUSTION TEST:

Ensure that the gas inlet pressure has been checked and is satisfactory,
refer to section 6.5.1

- ▶ Connect the flue gas analyser to the flue gas sampling point as shown in the figure below.
- ▶ Run the boiler at maximum output for at least 10 minutes.
- ▶ Check the CO/CO_2 readings against the information in table 30 CO/CO_2 settings on page 36.

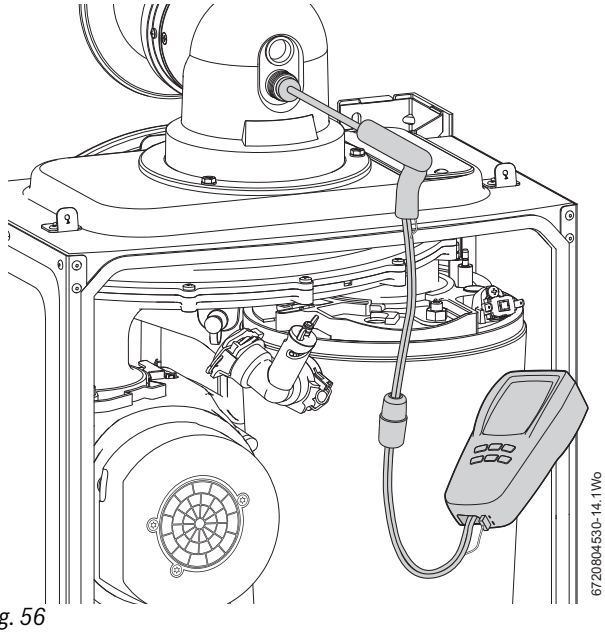

Fig. 56

If the boiler fails the combustion test, check:

1. Air intake for restriction
2. Diaphragm in the fan, for correct operation
3. Cleanliness of the heat cell, plus blockages in the condensate disposal.

7.6 SETTING THE AIR/GAS RATIO

NOTICE: THE SETTING OF THE GAS RATIO MUST BE CARRIED OUT BY A COMPETENT PERSON. SETTING OF THE GAS RATIO MUST NOT BE ATTEMPTED UNLESS THE PERSON CARRYING OUT THE TEST IS EQUIPPED WITH A COMBUSTION ANALYSER CONFORMING TO BS 7927 AND IS COMPETENT IN ITS USE.

7.6.1 SETTING THE CO/CO_2

- ▶ Refer to section 7.2 and ensure that the gas inlet pressure is correct before continuing.
- ▶ To adjust the CO/CO_2 it will be necessary to first operate the boiler at maximum output.
- ▶ Refer to section 7.4 for setting the boiler to maximum and minimum output.
- ▶ Refer to table 30 and check the CO/CO_2 at maximum. If required set the maximum CO/CO_2 via adjuster (1) on the gas valve using a 2.5mm Allen key.
- ▶ Check CO is less than 200ppm.
- ▶ Set the control to minimum.
- ▶ The boiler will go to minimum power.
- ▶ Measure the CO/CO_2 and check against table 30.
  If required set the minimum CO/CO_2 via adjuster (2) on the gas valve until the correct measurement is set:
  - Remove dust cap with flat bladed screw driver.
  - Using a 4mm Allen key adjust CO_2.
  - Replace the dust cap.
- ▶ Check that the CO is less than 200ppm.
- ▶ Return the boiler control to maximum and re-check the CO/CO_2.
  If correct, set the boiler control to normal “NORM”.
- ▶ Re-fit the control cover
- ▶ Re-fit boiler outer case.

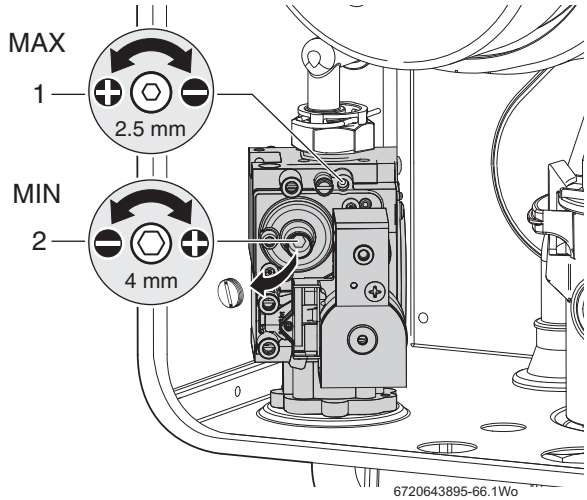

Fig. 57 Gas valve adjustment

CO/CO_2 settings for Greenstar Ri **CO/CO_2 should be measured after 10 minutes.**		
Gas type	CO_2 max.	CO_2 min.
Natural gas 12 Ri	9.65% ± 0.5	8.65% ± 0.5
Natural gas 15/18/24 Ri	9.8% ± 0.5	9.2% ± 0.5
L.P.G.	11.0% ± 0.5	10.5% ± 0.5
NOTE: When checking an existing appliance the tolerance is ± 0.5. If checking after cleaning or component replacement or for adjustment when the reading obtained is outside the tolerances given above, then the tolerance is ± 0.2.		
CO - less than 200 ppm (0.002 ratio)		

Table 30 CO/CO_2 settings

7.7 CLEANING THE HEAT EXCHANGER

NOTICE: COMBUSTION TESTING
- ▶ Combustion testing must be carried out by a competent person. Testing must not be attempted unless the person carrying out the combustion check is equipped with a Combustion Analyser conforming to BS 7927 and is competent in its use.

NOTICE: CO/CO_2 CHECKS
- ▶ If the joint between the Air/Gas manifold and heat exchanger is disturbed, replace the sealing gasket.
- ▶ After completing the service of the appliance, the CO/CO_2 must be checked and set to the limits shown in “Setting the air/gas ratio” on page 36.

There is a special accessory kit available specifically designed for cleaning the heat exchanger. If required order 7 716 192 312.

- ▶ Isolate the power to the appliance and remove outer case and base panel.

1. Refer to figure 58 and remove the clip from gas valve outlet.

If the plastic elbow can not be easily removed, undo the nut to push the plastic elbow out of the fitting.

2. Pull the gas outlet elbow free from the gas valve.

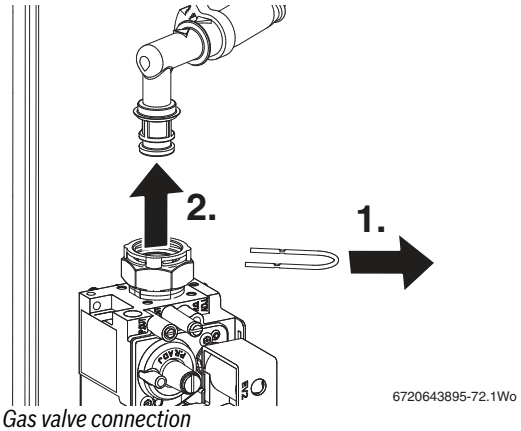

Fig. 58 Gas valve connection

- ▶ Remove electrical connector and earth wire from fan.

To prevent damage to the electrodes when removing the air/gas manifold, disconnect the leads to the electrodes.

- ▶ Disconnect spark electrode and flame sensor connections.

1. Refer to figure 59 and undo the securing nut on the top of the heat exchanger and remove the retaining plate assembly.

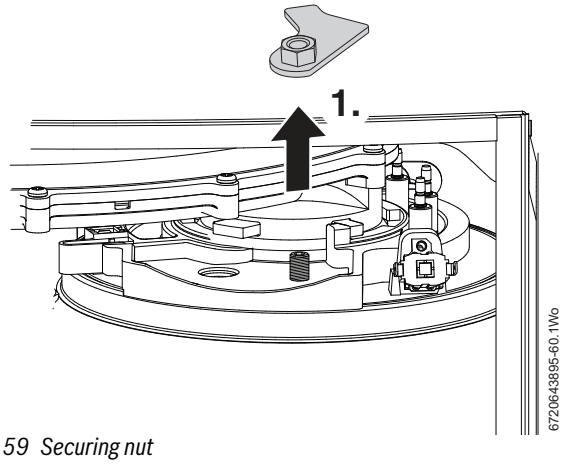

Fig. 59 Securing nut

1. Refer to figure 60 and rotate fan and air/gas manifold assembly around the top of the heat exchanger until it stops at the lug.
▶ Lift up assembly and remove from boiler.
2. Remove the cover panel by removing retaining screw.

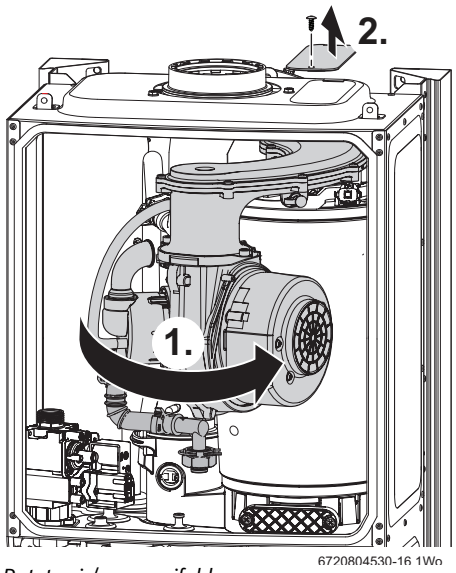

Fig. 60 Rotate air/gas manifold

BURNER REMOVAL

Refer to figure 61
1. Remove clamping plate.
2. Remove spark/flame electrode assembly and seal from the top of the heat exchanger.
3. Remove burner.

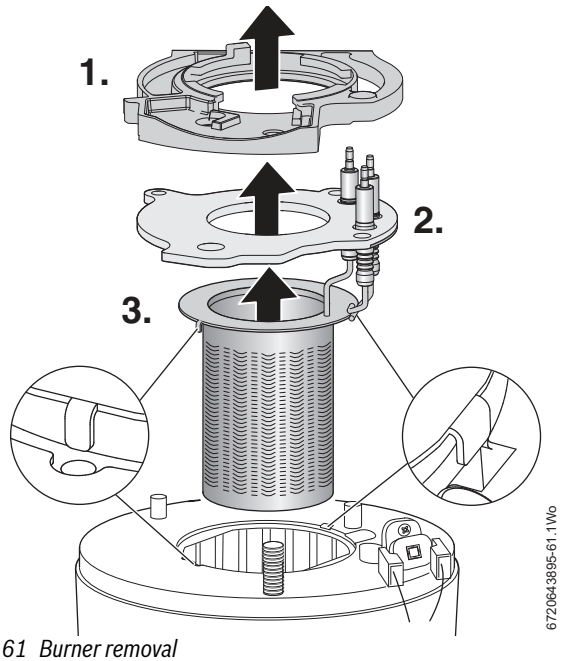

Fig. 61 Burner removal

Checking and cleaning the electrode assembly:

NOTICE: Cleaning
▶ Do not use wire wool to clean the electrodes

▶ Inspect the condition of the electrodes and ceramics, replace if necessary.
▶ Use a plastic scouring pad to clean the electrodes.

BAFFLE REMOVAL

1. Refer to figure 62and remove top baffle.
2. Remove lower baffle.

If the lower baffle is stuck, it may be necessary to use the "Baffle removal tool" from the heat exchanger cleaning kit - 7 716 192 312, as shown in figure 62.

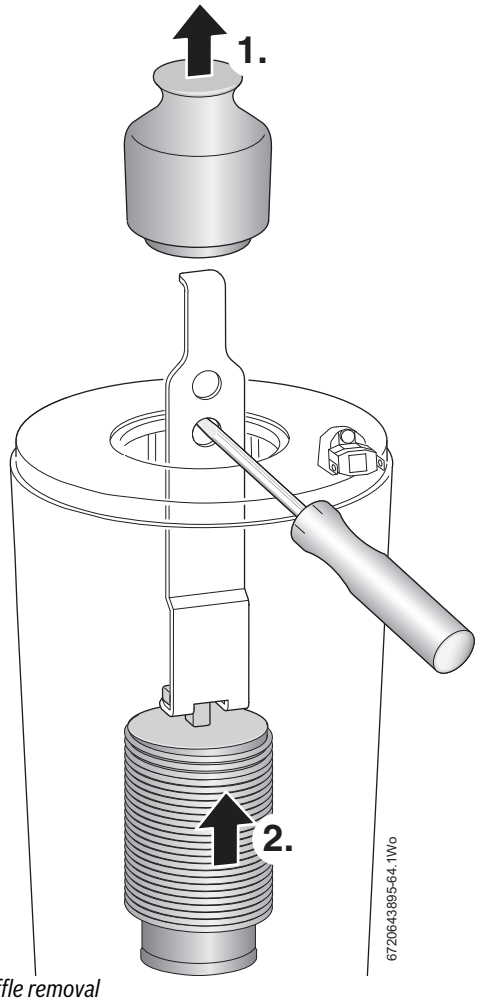

Fig. 62 Baffle removal

ACCESS COVER REMOVAL

Refer to figure 63.
1. Remove the two pozi-drive screws
2. Remove the access cover
3. Remove the gasket.

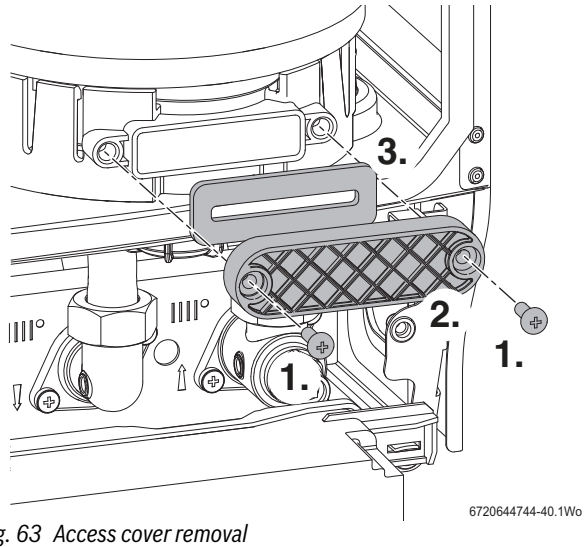

Fig. 63 Access cover removal

CLEANING THE PRIMARY HEAT EXCHANGER

- ▶ Refer to figure 64 and access the heat exchanger flue ways by inserting the cleaning brush (7 716 192 312) through the top access hole in the casing, removal of panel shown in figure 60.
- ▶ Clean heat exchanger flue ways using the cleaning brush removing any debris from the access point in the sump.
- ▶ Clean around the sealing surface on the sump.
- ▶ Replace the access cover.
- ▶ Using a suitable container to collect water from syphon connection at the base of the boiler flush heat exchanger with water.
- ▶ Re-assemble ensuring that the lower baffle (2) and the top baffle (1) are refitted correctly.
- ▶ Refer to figure 61 when re-fitting the burner to ensure that it fits centrally within the heat exchanger and location tabs are situated in location holes.
- ▶ Ensure that the seal is replaced with a new seal and ensure that the seal is correctly fitted.
- ▶ Check the syphon unit is clean before refitting to boiler.
- ▶ Reassemble and check combustion as stated in "SETTING THE AIR/ GAS RATIO" section on page 36.

The heat exchanger does not need to be removed to clean. The heat exchanger is shown removed from the boiler to illustrate cleaning more clearly.

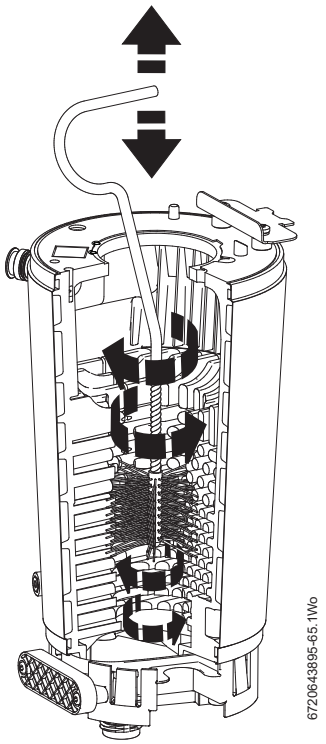

Fig. 64 Cleaning heat exchanger

NOTICE: Heat exchanger baffles.
The baffles (1) and (2) must be refitted into the heat exchanger in the order shown in figure 62. Failure to do so may result in damage to the boiler.

NOTICE: CO/CO_2 CHECKS
- ▶ If the joint between the Air/Gas manifold and heat exchanger is disturbed, replace the sealing gasket.
- ▶ After completing the service of the appliance, the CO/CO_2 must be checked and set to the limits shown in "Setting the air/gas ratio" on page 36.
- ▶ When replacing the burner gasket ensure that the clamping plate is fully tightened down to the heat exchanger.

7.7.1 SYPHON REMOVAL AND CLEANING

Remove the syphon assembly to clean.

To release the syphon from the sump:
1. Undo the plastic nut on the bottom of the syphon and move the condensate pipe away from the syphon.
2. Remove the two screws retaining the syphon bracket.
3. Remove the bracket.
4. Remove the screw and release the syphon retaining clamp
5. Swing the clamp completely to the left away from the syphon
6. Pull the syphon towards you and remove from the sump connection.

- ▶ Empty the contents of the syphon into a suitable container.
- ▶ Flush the syphon through with clean water

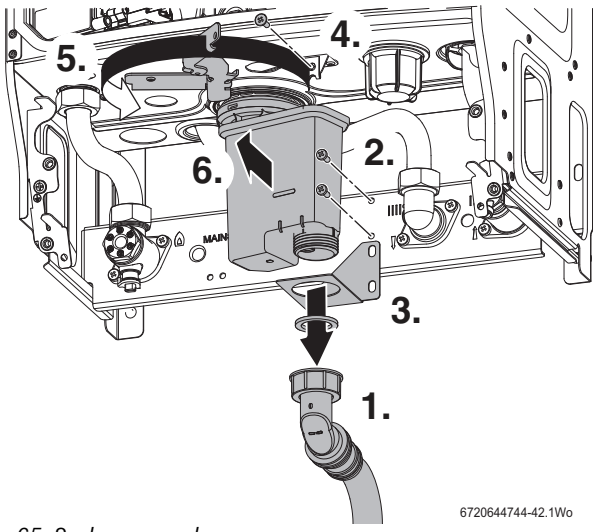

Fig. 65 Syphon removal

7.8 REPLACEMENT OF PARTS

CAUTION: TURN OFF THE GAS SUPPLY AND ISOLATE THE MAINS SUPPLIES BEFORE STARTING ANY WORK AND OBSERVE ALL RELEVANT SAFETY PRECAUTIONS.

NOTICE: REPLACEMENT OF COMPONENTS.

- ▶ After replacement of any components always check for gas tightness where relevant and carry out functional checks as described in Commissioning. Damaged O-rings or gaskets must be replaced.

7.8.1 REMOVING THE OUTER CASING

- ▶ Remove bottom tray by pressing the tabs (2) in, at the front underside of the boiler.
- ▶ Lower the panel.
- ▶ Pull the panel forward, off the retaining ledge (1) at the back of the boiler.

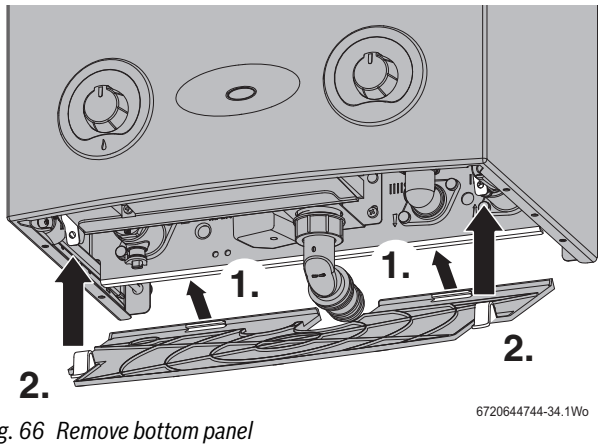

Fig. 66 Remove bottom panel

1. Undo the two screws securing the top of the boiler casing.
2. Undo the two screws securing the bottom of the boiler casing.

- ▶ Pull case forward and remove.

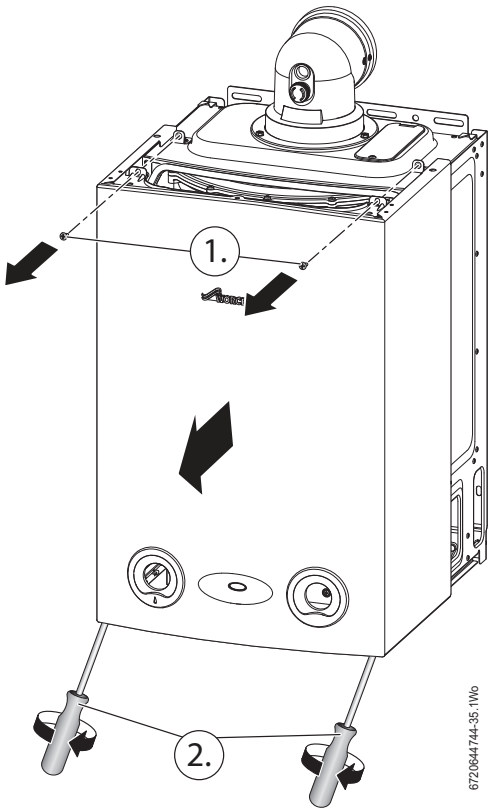

Fig. 67 Remove outer case

7.8.2 PRIMARY SENSOR (CH NTC)

To gain access to the following components the outer case has to be removed:

- ▶ Primary sensor
- ▶ Overheat thermostat
- ▶ Flue limit thermostat

Refer to figure 68 for removal.

1. Remove electrical connection by pulling upwards. Squeeze retaining clip on plastic moulding of sensor and pull back and up until clear of pocket in heat exchanger.
2. Pull forward to remove completely.

- ▶ Coat new sensor with heat conductive paste and replace.

7.8.3 OVERHEAT THERMOSTAT

Refer to figure 68 for removal.

- ▶ Remove two electrical connectors from thermostat.

3. Slacken and remove fixing screw and thermostat (3).

- ▶ When replacing ensure thermostat sits correctly on surface of the casting with the left hand side of thermostat sitting up against the shoulder.

It is essential that the mating surface of the thermostat is coated with heat conductive paste.

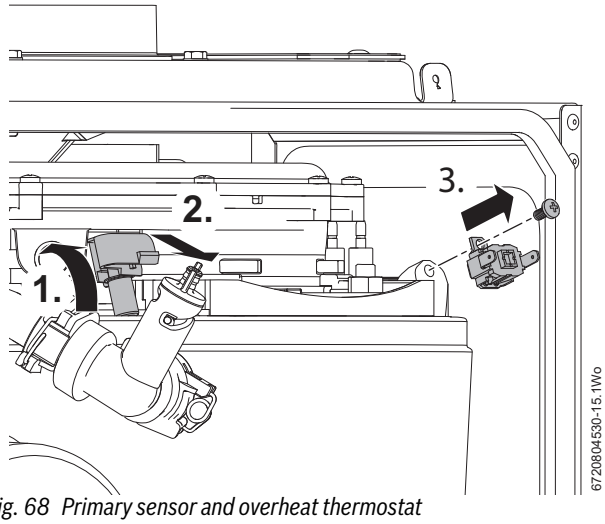

Fig. 68 Primary sensor and overheat thermostat

7.8.4 FLUE OVERHEAT THERMOSTAT (WITH GROMMET)

To remove and replace the thermostat either:

▶ Using a small terminal screwdriver, prise the thermostat and grommet from the plastic housing.
Take care not to damage the plastic housing.

-or-

1. Release the flue connection from the sump.
2. Push the flue tube up.

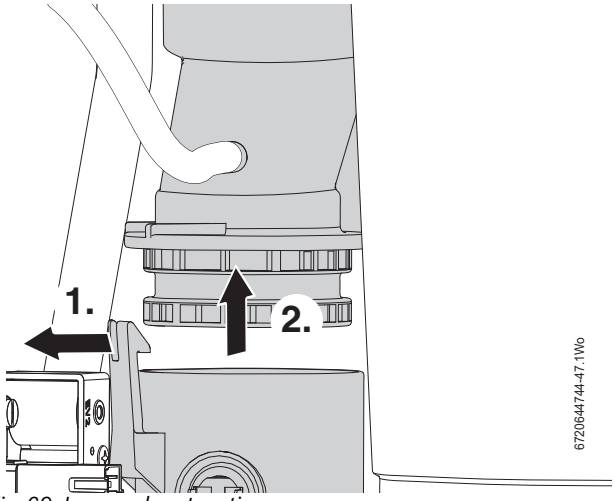

Fig. 69 Lower exhaust section

▶ Remove electrical connections.

1. Push the flue limit thermostat in from the sump.

▶ Retrieve the thermostat from the sump well.

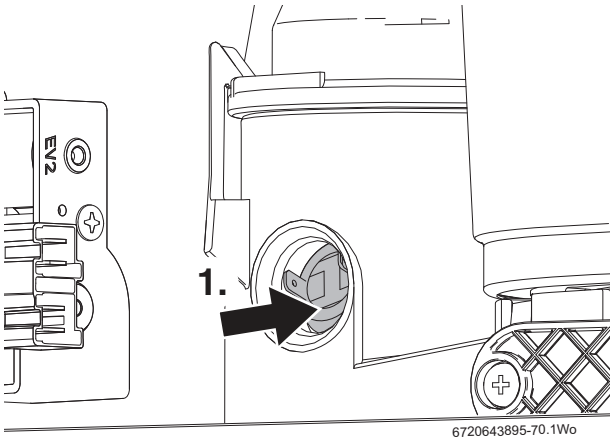

Fig. 70 Remove thermostat

To replace, push the thermostat and new grommet gently back into the opening until contact with the locating ridge is felt.

7.8.5 LOWERING THE BOILER CONTROLS TO THE SERVICE POSITION:

1. Remove two screws securing control.
2. Pull the control forward.
3. Lower the control to align the slots at the top of the control with the lugs on the boiler framework.
4. Hang control on two lugs on boiler framework.

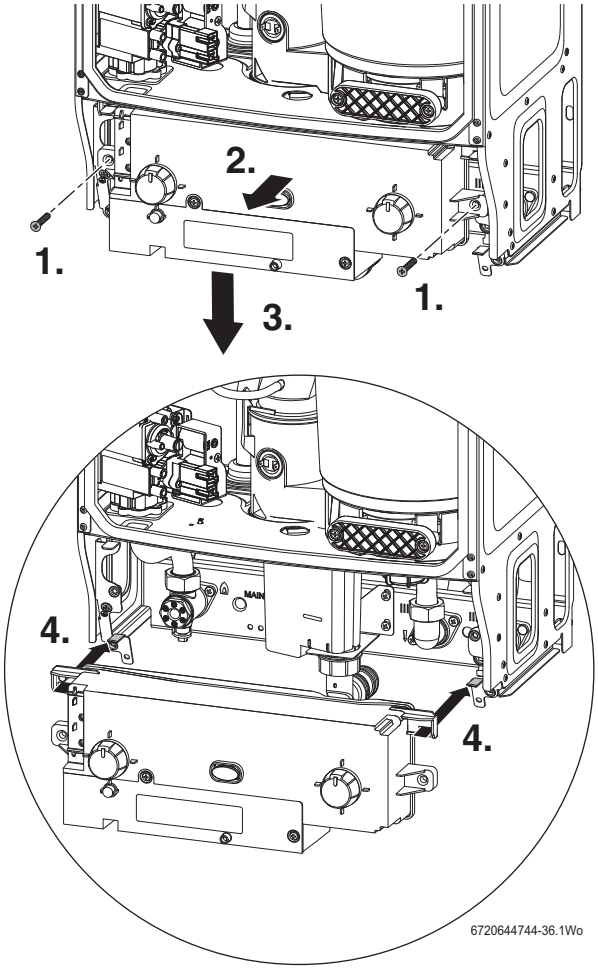

Fig. 71 Control panel into service position

7.8.6 GAS VALVE

▶ Isolate gas supply at boiler gas cock.

1. Refer to figure 72 and re move the wire clip from the gas valve outlet.
2. Pull the gas pipe free from the gas valve.
   If the pipe will not pull out, unscrew the nut to aid removal.

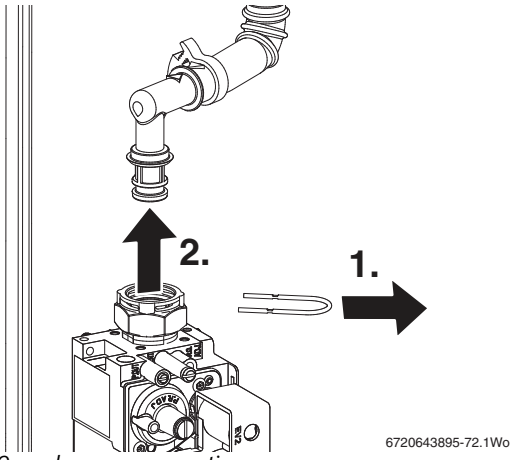

Fig. 72 Gas valve upper connection

1. Refer to figure 73 and undo bottom gas connection to gas valve.
2. Undo two securing screws on the underside of casing.

▶ Disconnect electrical connections.
▶ Pull valve up and forward out of boiler.
▶ Replace valve with new seals and check for gas tightness.

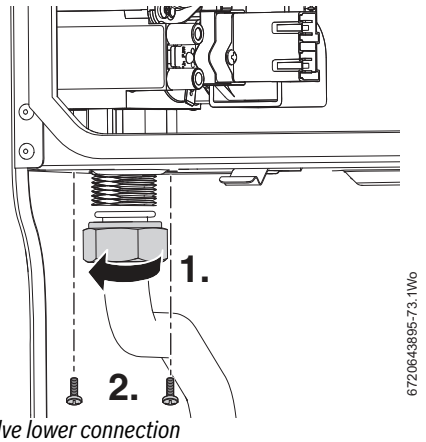

Fig. 73 Gas valve lower connection

NOTICE: The valve will require setting; follow procedure “Setting the air/gas ratio”.

7.8.7 AIR/GAS MANIFOLD AND FAN ASSEMBLY

The following components require the air/gas manifold and fan assembly to be removed:
▶ Fan electrode assembly
▶ Burner
▶ Heat exchanger

NOTICE:
▶ If the joint between the Air/Gas manifold and heat exchanger is disturbed sealing gasket must be replaced.
▶ After re-assembly the combustion must be checked using the procedure in the section “Setting the Air/ Gas ratio”. Measurement and setting (if necessary) of the gas ratio must not be attempted unless the person is equipped with a combustion analyser conforming to BS 7927 and is competent in its use.

▶ Remove electrical connector and earth wire the from fan.
▶ Remove wire clip from gas valve outlet then pull gas pipe free from the gas valve (see figure 72).

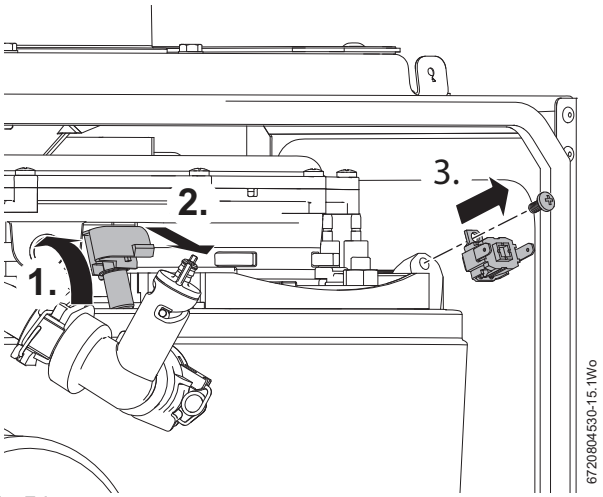

Fig. 74

▶ Undo the securing nut at the top of the heat exchanger and remove the retaining plate assembly (1).

Disconnect spark electrodes and flame sensor connection.
This will prevent damage to the electrodes and sensor when the air/gas manifold is rotated.

1. Rotate fan and air/gas manifold assembly (1.) around the top of the heat exchanger until the lug on the air/gas manifold is visible.

▶ Lift up assembly and remove from boiler.

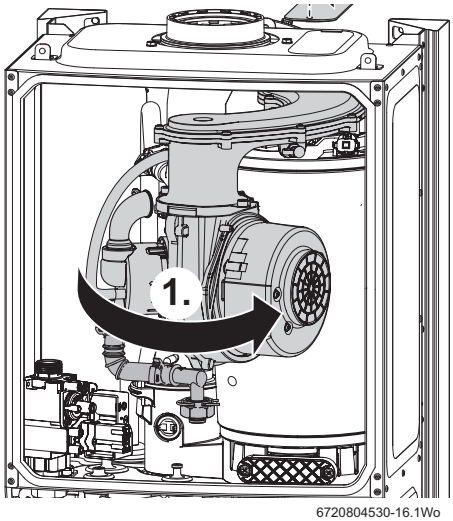

Fig. 75 Rotate the air/gas manifold assembly

NOTICE: After re-assembly, check the CO/CO_2 levels as described in section 7.6 Setting the air/gas ratio.

7.8.8 AIR PRESSURE SWITCH

NOTICE: Pressure switch
▶ Ensure that the tube is reconnected to the pressure switch

1. Remove the electrical connections.
2. Slacken the top retaining screw and remove the bottom screw.
3. Disconnect the tube.
4. Remove the Air pressure switch assembly

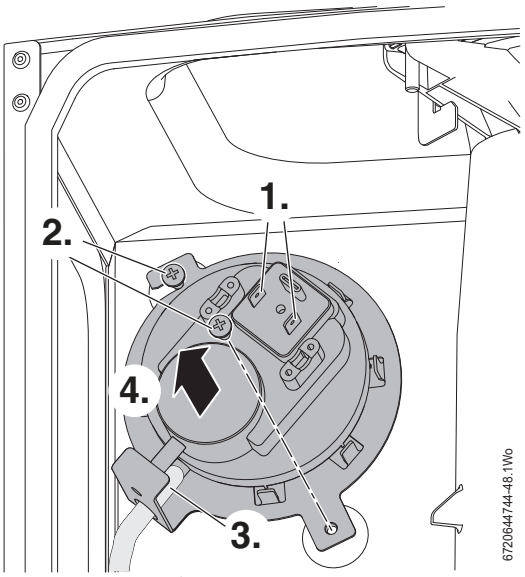

Fig. 76 Air pressure switch

1. Remove the two screws retaining the pressure switch to the bracket.
2. Refit the new Air pressure switch to the bracket.

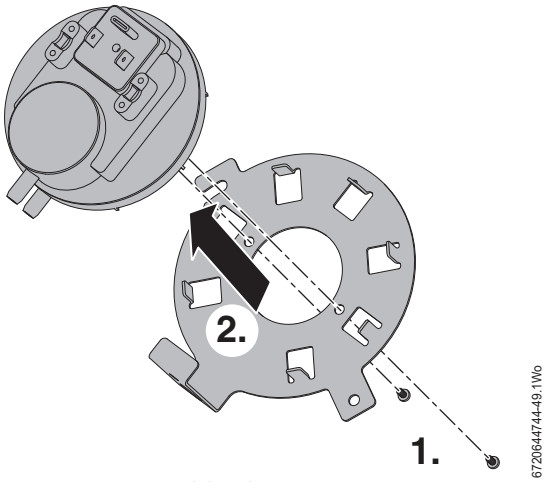

Fig. 77 Air pressure switch bracket

NOTICE: After re-assembly, check the CO/CO_2 levels as described in section 7.6 Setting the air/gas ratio.

7.8.9 FAN

▶ Remove the air/gas manifold from the boiler as described in the previous section.

1. Remove two screws retaining the fan to the air/gas manifold.
2. Remove the air/gas manifold.
3. Remove the screw holding the retaining plate.
4. Remove the retaining plate.
5. Remove three screws and the mixing chamber.

Re-assemble with new fan ensuring seals are correctly fitted.

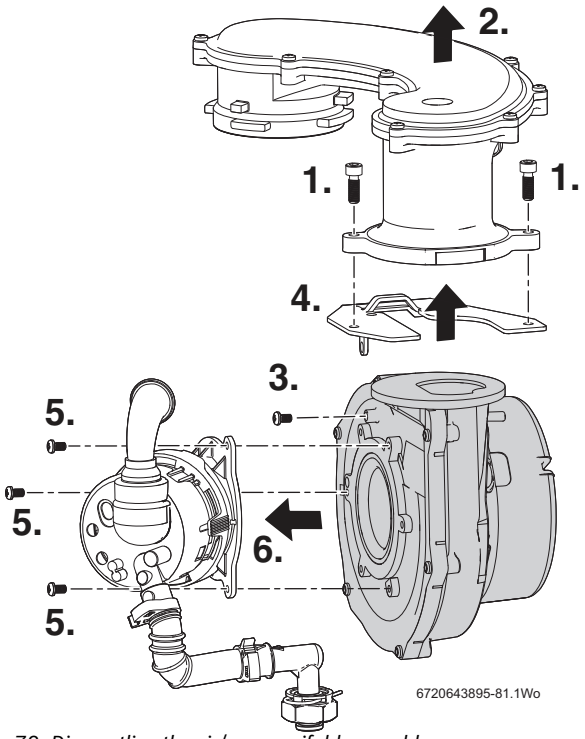

Fig. 78 Dismantling the air/gas manifold assembly

FLAP VALVE ASSEMBLY

1. Twist the mounting flange clockwise to release.
2. Pull mounting flange off the flap valve assembly.
3. Pull rubber flap off flap valve assembly.

▶ To replace the flap valve:
– Press the two lugs on the back of the flap into the two slots in the flap valve assembly.

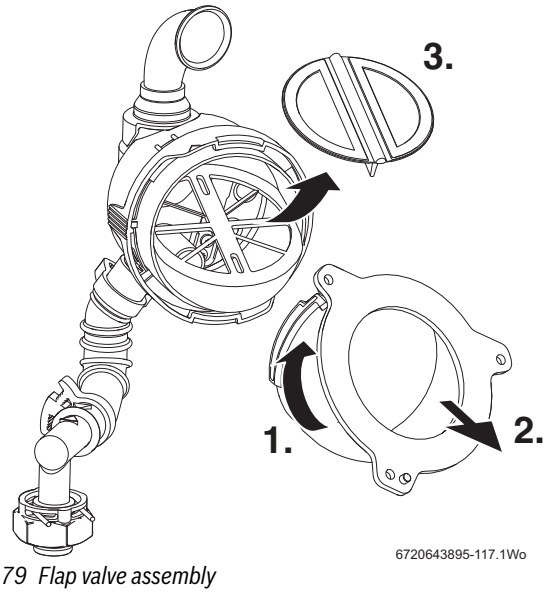

Fig. 79 Flap valve assembly

7.8.10 ELECTRODE ASSEMBLY AND BURNER

- ▶ Refer to figure 80 and disconnect spark electrodes and flame sensor connection.
- ▶ Remove clamping plate.

1. Remove spark/flame electrode assembly from heat exchanger.
2. Remove the seal from the top of the heat exchanger.
3. Remove the burner.

- ▶ Replace new burner in correct position.
- ▶ Ensure that burner tabs, as shown in figure 80, fit correctly their respective locations.

NOTICE: Heat exchanger seal
- ▶ If the joint between the Air/Gas manifold and heat exchanger is disturbed sealing gasket must be replaced.
- ▶ After re-assembly the combustion must be checked using the procedure in the section 7.6 “Setting the Air/Gas ratio”.

- ▶ Ensure that the seal is fitted.

CAUTION: Clamping plate
- ▶ Ensure that the clamping plate is firmly tightened down on top of the heat exchanger.

- ▶ Replace the clamping plate.

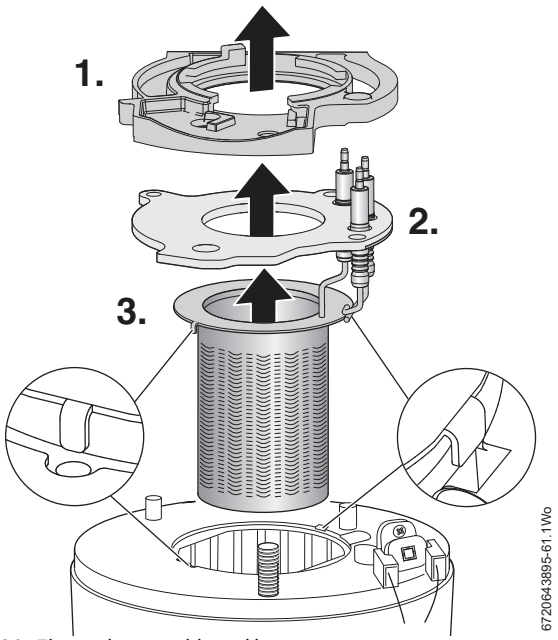

Fig. 80 Electrode assembly and burner

7.8.11 RE-ASSEMBLY OF THE BURNER CLAMPING PLATE

NOTICE: Heat exchanger seal
- ▶ If the joint between the Air/Gas manifold and heat exchanger is disturbed the sealing gasket must be replaced.
- ▶ After re-assembly the combustion must be checked using the procedure in the section 7.6 “Setting the Air/Gas ratio”.

- ▶ Ensure that the new gasket is fitted, with the electrode assembly and gasket heat shield

CAUTION: Clamping plate
- ▶ Ensure that the clamping plate is firmly tightened down on top of the heat exchanger.

- ▶ Locate the edge of the clamping plate [7] under the bracket [4] and fit the retaining plate[1] hand tight
- ▶ Ensure that the retaining plate [1] is in the position shown in figure 81
- ▶ At this point the Air/Gas Manifold/Fan assembly [8] should be fitted, engage the lugs in the slots in the clamping plate and rotate clockwise to the stop position.
- ▶ Rotate the retaining plate assembly [1] in the slot on the clamping plate [2], this will prevent the Air/Gas manifold [8] rotating back
- ▶ Initially there will be a gap between the clamping plate and the top of the heat exchanger, refer to figure 81

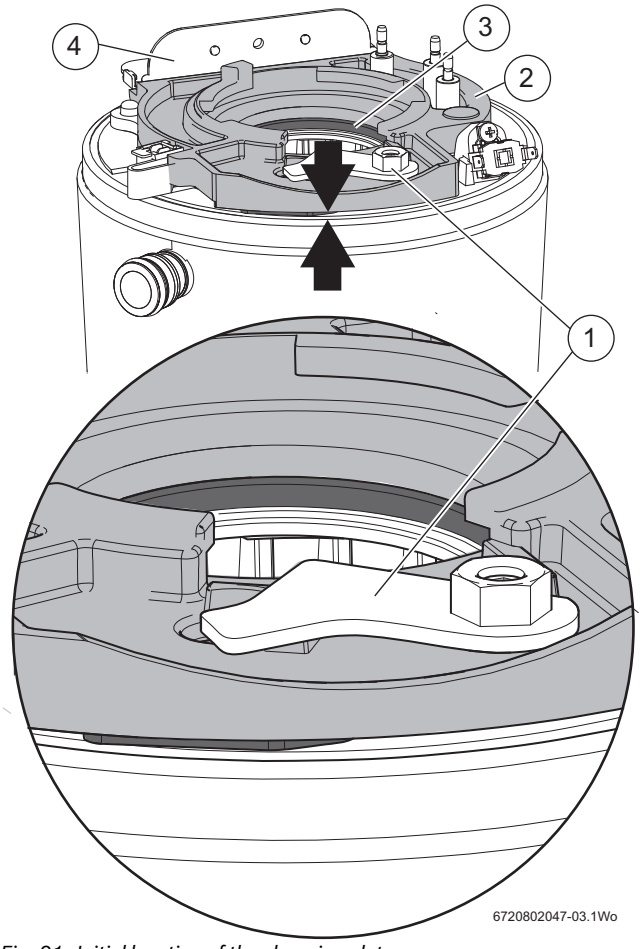

Fig. 81 Initial location of the clamping plate

[1] Retaining plate assembly
[2] Clamping plate
[3] Gasket
[4] Bracket
[5] Underside view of the clamping plate
[6] Mating surface
[7] Location edge
[8] Air/Gas manifold assembly

- ▶ Tighten the nut on the retaining plate assembly [1] until the underside face of the clamping plate mates with the top of the heat exchanger as indicated by the two arrows in figure 83
  Refer to figure 82 for detail of the clamping and mating surface [6]
- ▶ It is important to clamp the plate down firmly, without over tightening, to the heat exchanger to ensure a gas tight seal

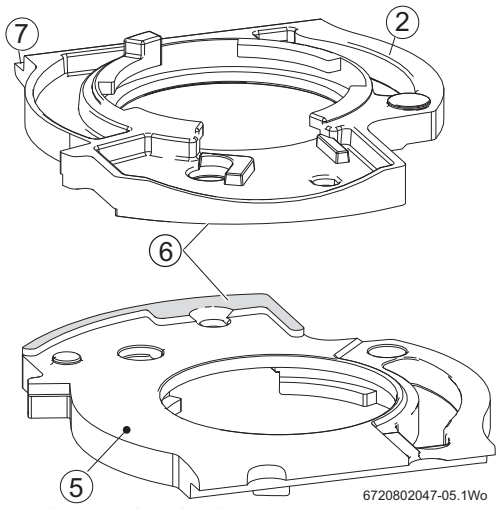

Fig. 82 Clamping plate detail

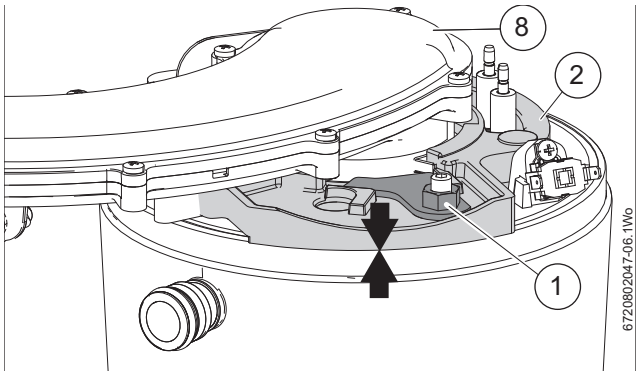

Fig. 83 Clamping plate secured

7.8.12 HEAT EXCHANGER

- ▶ Drain the system.
- ▶ Remove syphon.
- ▶ Remove the air/gas manifold and fan.

1. Refer to figure 84, remove the clip from the elbow on the flow pipe.
2. Pull flow pipe away from heat exchanger.

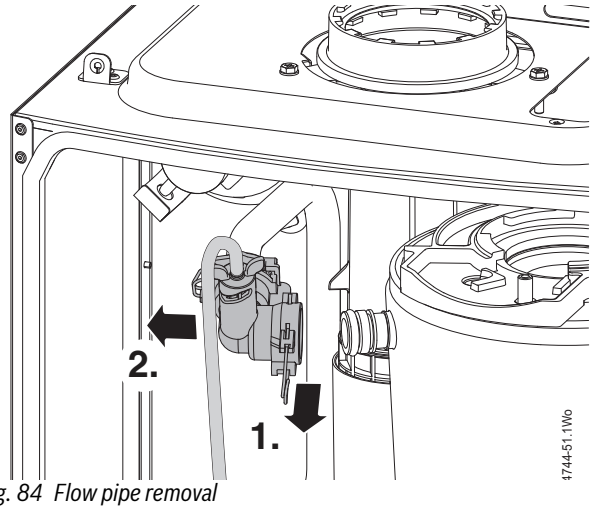

Fig. 84 Flow pipe removal

1. Refer to figure 85 and re move the three screws securing the turret to the top of the boiler.
2. Turn the upper exhaust connector anti-clockwise to release from the hook.
3. Pull the upper exhaust connector down.

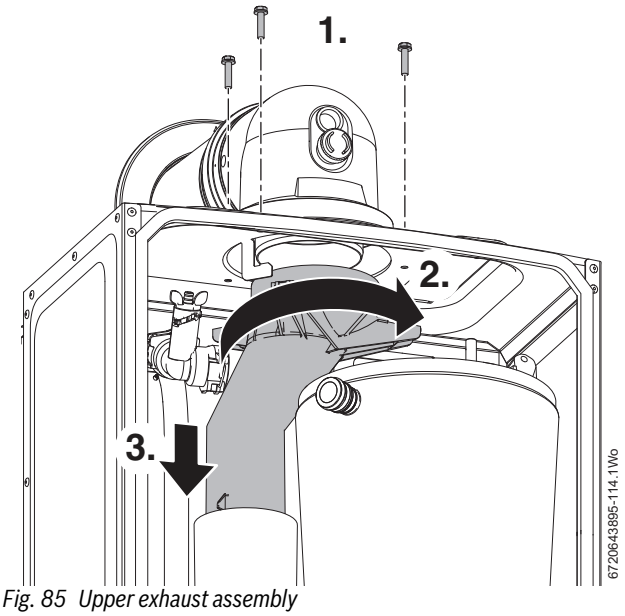

Fig. 85 Upper exhaust assembly

1. Refer to figure 86 and release the clip.
2. Move the lower exhaust connector up

- ▶ Remove the complete exhaust assembly.

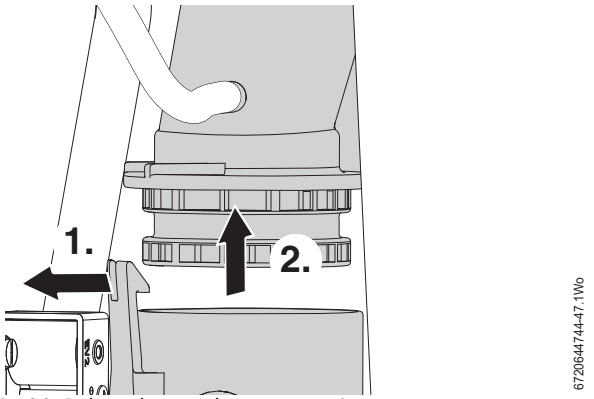

Fig. 86 Release lower exhaust connection

1. Refer to figure 87 and unscrew the plastic nut.
2. Remove the nut from the bottom of the boiler.
3. Rotate lever to release the return pipe.

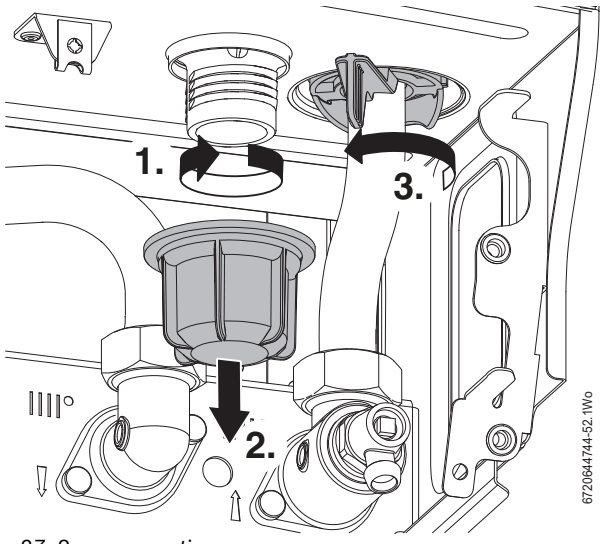

Fig. 87 Sump connections

1. Refer to figure 88 and lift the heat exchanger up to clear.
2. Pull the heat exchanger forward from the case.

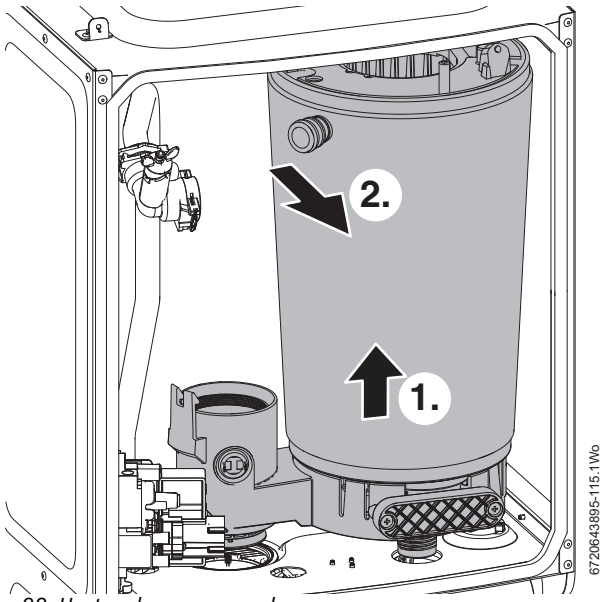

Fig. 88 Heat exchanger removal

▶ Reassemble and check combustion as stated in the air/gas ratio section. 7.6.

NOTICE: CO/CO_2 CHECKS

▶ If the joint between the Air/Gas manifold and heat exchanger is disturbed sealing gasket must be replaced.

▶ After completing the service of the appliance, the CO/CO_2 must be checked and set to the limits shown in "Setting the air/gas ratio" in section 7.6.

7.8.13 SYPHON REMOVAL

To release the syphon from the sump:

1. Undo the plastic nut on the bottom of the syphon and move the condensate pipe away from the syphon.
2. Remove the two screws retaining the syphon bracket.
3. Remove the bracket.
4. Remove the screw and release the syphon retaining clamp
5. Swing the clamp completely to the left away from the syphon
6. Pull the syphon towards you and remove from the sump connection.

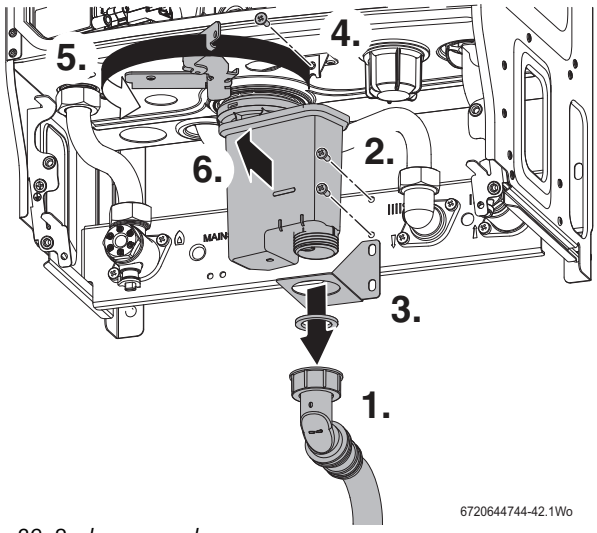

Fig. 89 Syphon removal

7.8.14 ACCESS TO BOILER CONTROL COMPONENTS

1. Remove three screws.
2. Remove cover from control.

7.8.15 PCB FUSE

▶ Remove fuse holder with fuse F1 (1) from the control and replace with a new fuse.

A spare 2A fuse for F1 clipped onto the inside of the cover.

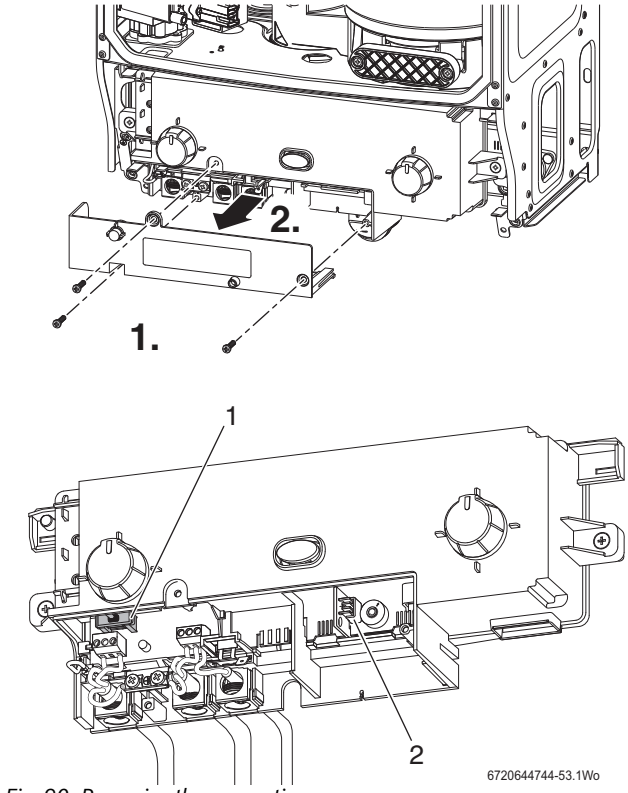

Fig. 90 Removing the connection cover

7.8.16 CODE PLUG

Refer to figure 90 for code plug replacement:

▶ Gently pull the code plug from the socket (2).

▶ The code plug should be left attached to the frame of the boiler by its plastic safety thread.

7.8.17 TRANSFORMER/PCB

To change either the PCB, F2 fuse or transformer:

▶ Remove two screws securing the control.

▶ Pull the control forward.

▶ Lower the control to align the slots at the top of the control with the lugs on the boiler framework.

▶ Hang control on two lugs on boiler framework.

1. Unscrew the three screws in the control panel.
2. Remove the connections cover and disconnect all electrical connections from the control.
3. Remove the control from the boiler.
4. Remove the four screws retaining the rear panel of the control.
5. Remove the rear panel.
6. Remove the transformer cover.
7. Remove the printed circuit board.

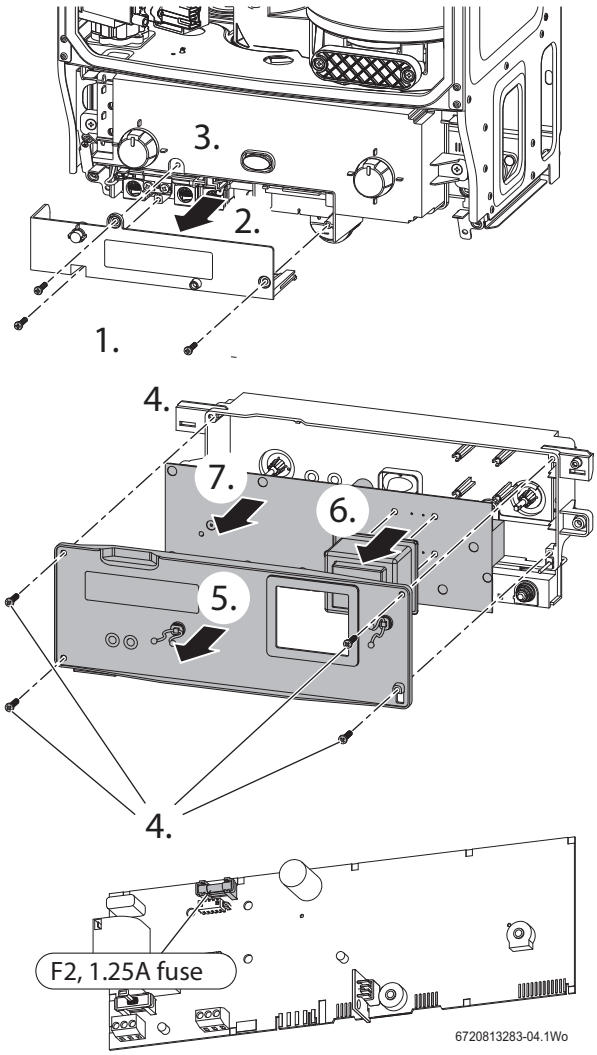

Fig. 91 Transformer/PCB/Fuse access

- ▶ Remove the code plug from the old control board.
- ▶ Fit the code plug into the new control board.
- ▶ Re-assemble in reverse order.

NOTICE: CODE PLUG
- ▶ Ensure that the code plug is fitted to the new control.
- ▶ The appliance will indicate an error and will not function correctly.

NOTICE: CO/CO_2
- ▶ After completing the service of the control, the CO/CO_2 must be checked and set to the limits shown in “Setting the air/gas ratio” in section 7.6.

7.9 SHORT PARTS LIST

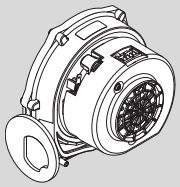 Fan 8 716 116 067 0 GC No. H26 536	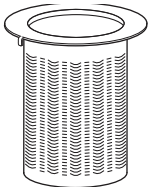 Burner 12 & 15Ri: 8 716 116 379 0 GC No. H26 537 18 & 24Ri: 8 716 120 619 0 GC No. H26-538	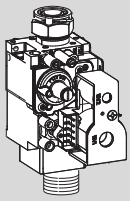 Gas Valve 12/15/18 & 24Ri 8 716 111 325 0 GC No. H26 540
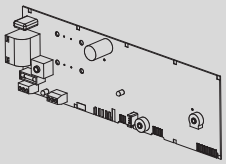 Control board 8 718 687 164 0 H26-541	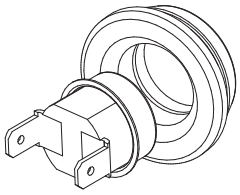 Flue overheat thermostat (grommet type) 8 710 506 267 0	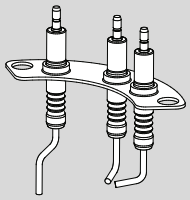 Electrodes (including gasket) 8 718 107 087 0
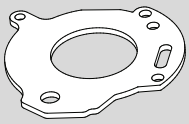 Gasket - burner WB6 8 716 110 534 0	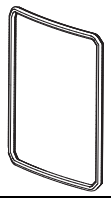 Seal - Inner case/mantel 8 716 106 635 0 H26-545	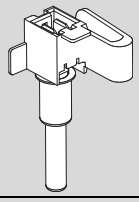 Flow temperature sensor - (NTC) 8 716 106 688 0 GC No. H26 542
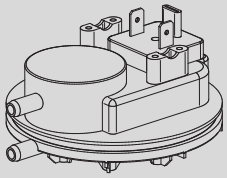 Air pressure switch 8 716 106 633 0 G.C. No. H26 543	Seals kit 8 716 107 224 0 GC No. H10 876	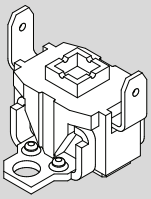 High limit stat 8 707 206 196 0 GC No. H26 584
Flue sample plug - vertical adapter 8 710 506 199 0	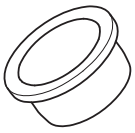 Flue sample plug - air intake 8 716 111 253 0	Flue sample plug - gas outlet 8 716 111 252 0
Sump gasket 8 716 113 829 0	O ring - Syphon 8 716 113 851 0	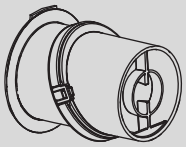 Terminal end 8 716 111 209 0
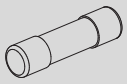 Fuse F1 8 716 156 000 0 GC No. E27-716	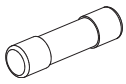 Fuse F2 8 716 156 001 0	Wall mounting template:- 8 718 689 070 0

8 FAULT FINDING AND DIAGNOSIS

8.1 FAULT FINDING

This fault finding information is for guidance only. Worcester cannot be held responsible for costs incurred by persons not deemed to be competent.

The electronic control system for this boiler incorporates a blue central indicator. This normally confirms the permanent mains supply but, by flashing at different rates during a fault, provides a guide to the cause as listed.This fault finding system assumes that the appliance has been operating normally until the time of failure (i.e. not a first installation error).PRELIMINARY CHECKS: Preliminary electrical system checks are the first electrical checks to be carried out during a fault-finding procedure. On completion of the Service/Fault-Finding task which has required the breaking and remaking of electrical connections, check:
(a) EARTH CONTINUITY, (b) SHORT CIRCUIT CHECK, (c) POLARITY and (d) RESISTANCE TO EARTH.

Blue light indication	Fault	Possible solution/check
No light	No power at control board	Permanent mains supply to boiler. Boiler mains switch ON. Fuse F1 - 2A Slow blow. Fuse F2 - 1.25A Anti-surge. Transformer (both coils below 100 Ω. Otherwise replace control board.
Light ON	Boiler ON but not operating during demand	Live demand at ST2 terminal L_R - is there a demand? Manual bypass is open. If CH is working check HW controls If HW is working check CH controls (i.e. external diverter valve, frost stat, room stat/programmer. Otherwise replace board.
Slow flash (mostly off, flashes on)	Ignition lockout	▶ Gas present and at correct pressure? ▶ Gas valve – Check that there is 35V d.c. to each solenoid – Check the resistance of each solenoid: Top solenoid = 380 Ω ± 10% (342 - 418 Ω) Bottom solenoid = 190 Ω ± 10% (171 - 209 Ω) ▶ Combustion CO_2 level. ▶ Flue condition. – Blocked flue? ▶ Blocked condensate pipe or frozen condensate. ▶ Gas valve adjustment. ▶ Ignition electrodes/harness/connections. – Check for condition and resistance of leads (approximately 2100 Ω) ▶ Otherwise replace control board
Slow flash (mostly on, flashes off)	Flue overheat	Flue temperature too high. ▶ Heat exchanger baffles removed and not refitted.
	Heat exchanger overheat	▶ Heat exchanger blocked ▶ Water pressure ▶ All air vented ▶ Pump/harness/connections. ▶ Water leaks/blockage ▶ Safety thermostats/low voltage wiring harness/connections ▶ Otherwise replace control board
	Flue pressure switch	Blockage in the flue system.
Fast flash	Volatile lockout (sensor, fan or code plug)	▶ Temperature sensors – Check condition and continuity of leads – Check resistance of sensor (8k - 20k Ω) ▶ Fan – 230V A.C. across the live (purple) and neutral (brown) ▶ Fan lead – Check continuity ▶ Code plug – Is code plug missing or not inserted properly.
2 pulses		Service mode switch in min. position
5 pulses		Service mode switch in max. position

Table 31 Fault finding

8.1.1 INTERNAL WIRING DIAGRAM

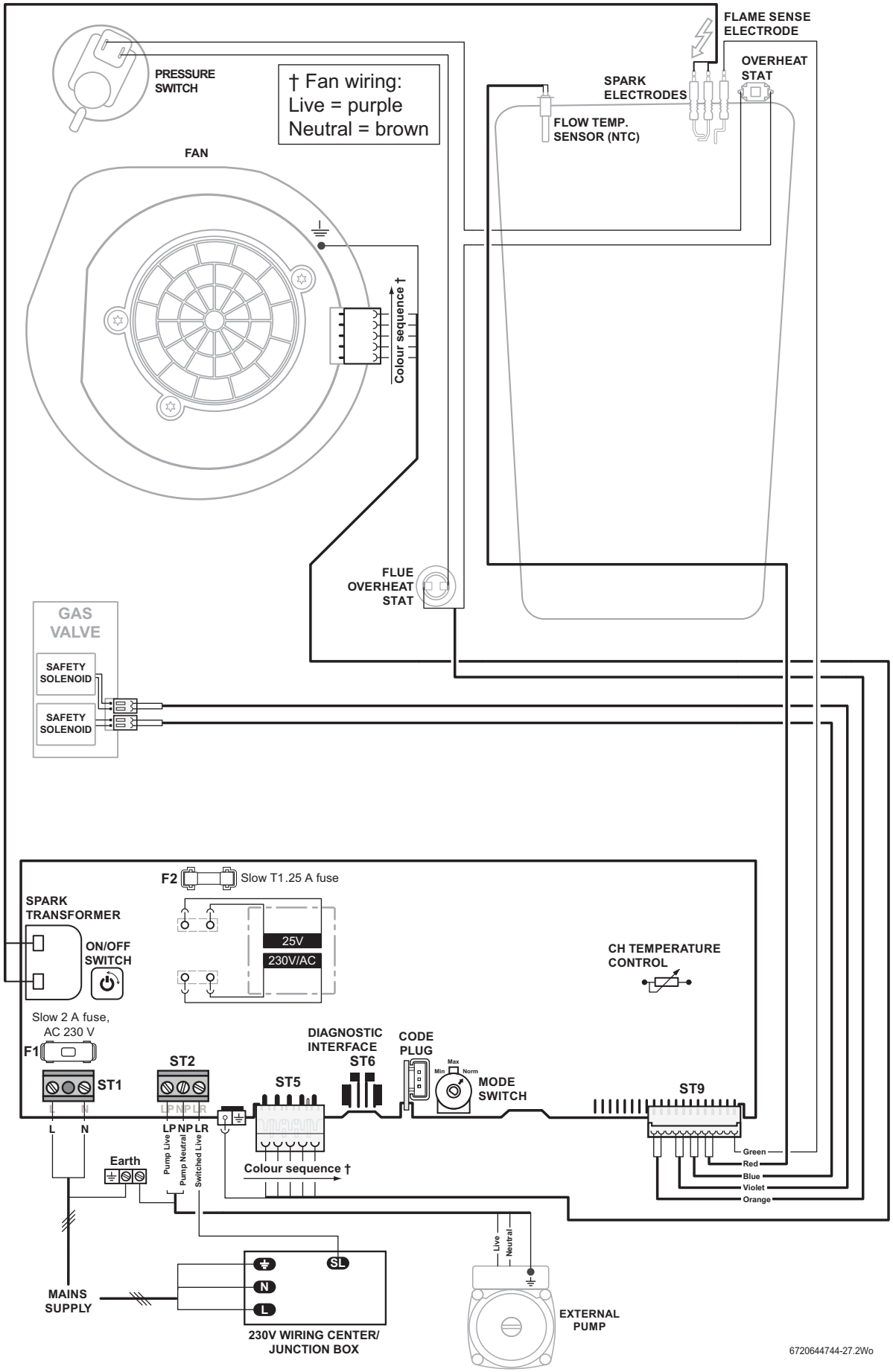

8.2 BOILER FUNCTION

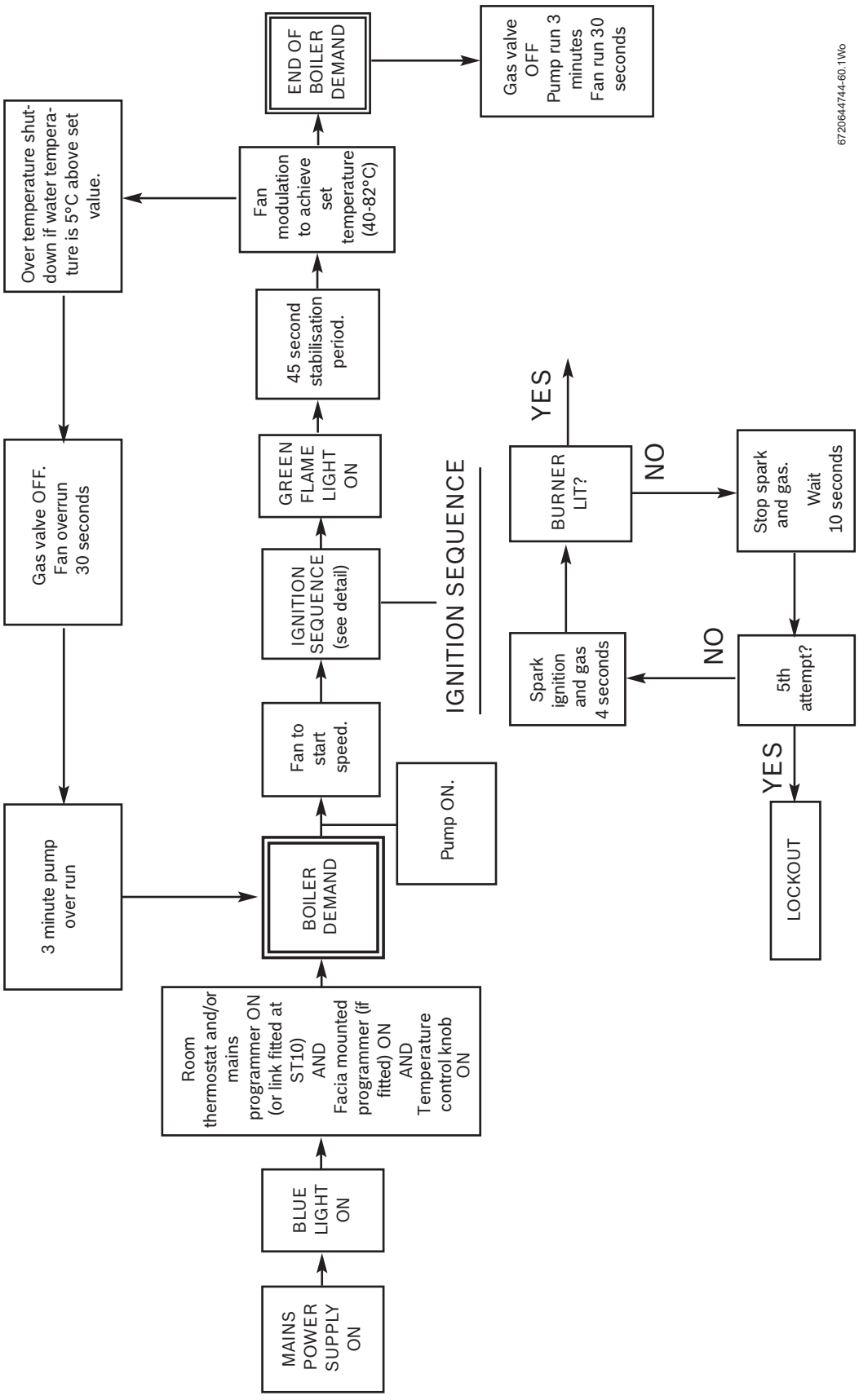

Fig. 92 Boiler function

8.3 PROTECTION FUNCTION

AUTOMATIC INTERNAL FROST FUNCTION

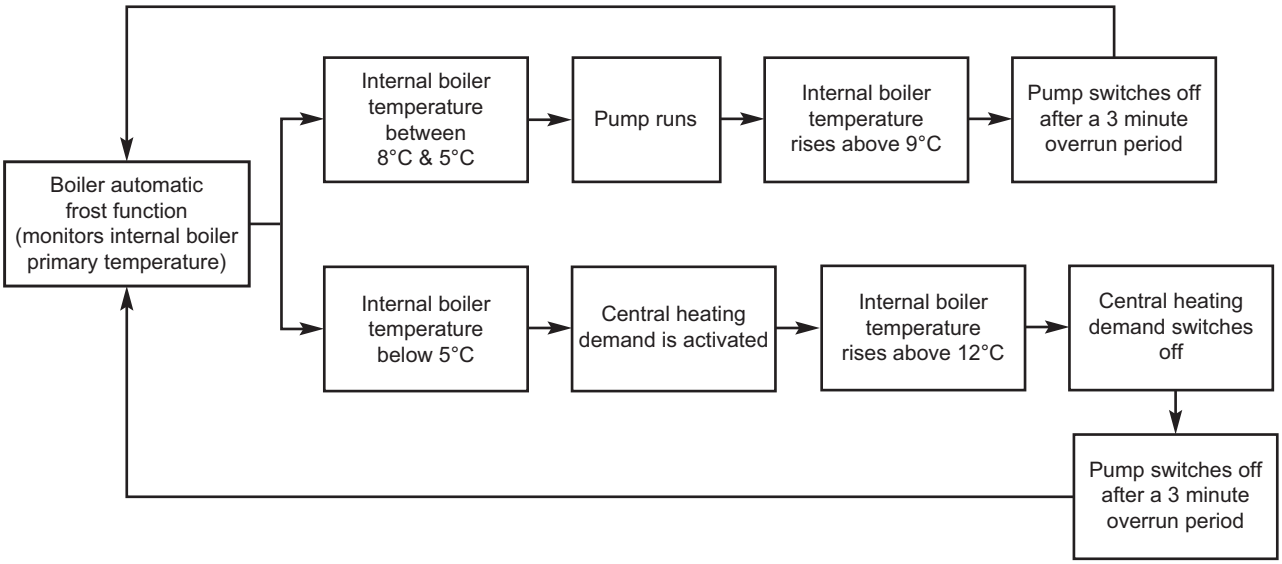

PUMP OVERRUN FUNCTION

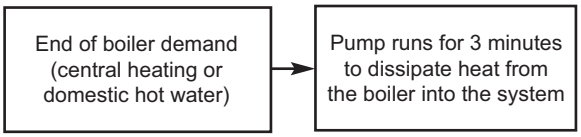

PUMP ANTISEIZE FUNCTION

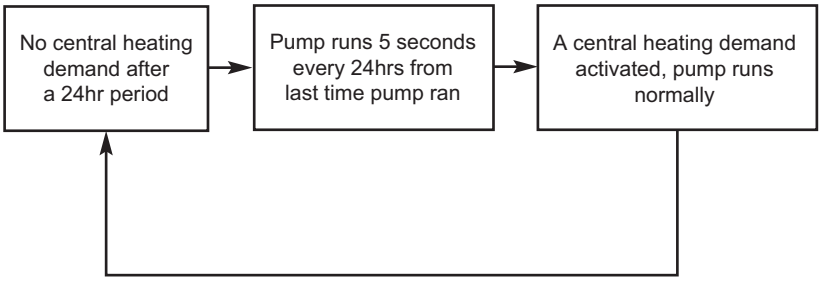

6720643895-111.1Wo

Fig. 93 Protection function

NOTES

NOTES

GAS BOILER SYSTEM COMMISSIONING CHECKLIST

This Commissioning Checklist is to be completed in full by the competent person who commissioned the boiler as a means of demonstrating compliance with the appropriate Building Regulations and then handed to the customer to keep for future reference.

Failure to install and commission according to the manufacturer's instructions and complete this Benchmark Commissioning Checklist will invalidate the warranty. This does not affect the customer's statutory rights.

Customer name:	Telephone number:
Address:	
Boiler make and model:	
Boiler serial number:	
Commissioned by (PRINT NAME):	Gas Safe register number:
Company name:	Telephone number:
Company address:	
	Commissioning date:
To be completed by the customer on receipt of a Building Regulations Compliance Certificate*	
Building Regulations Notification Number (if applicable):	

CONTROLS (tick the appropriate boxes)				
Time and temperature control to heating	Room thermostat and programmer/timer		Programmable room thermostat	
	Load/weather compensation		Optimum start control	
Time and temperature control to hot water	Cylinder thermostat and programmer/timer		Combination Boiler	
Heating zone valves	Fitted		Not required	
Hot water zone valves	Fitted		Not required	
Thermostatic radiator valves	Fitted		Not required	
Automatic bypass to system	Fitted		Not required	
Boiler interlock			Provided	

ALL SYSTEMS				
The system has been flushed and cleaned in accordance with BS7593 and boiler manufacturer's instructions			Yes	
What system cleaner was used?				
What inhibitor was used?			Quantity	litres
Has a primary water system filter been installed?	Yes		No	

CENTRAL HEATING MODE measure and record:			
Gas rate	m^3/hr	**OR**	ft^3/hr
Burner operating pressure (if applicable)	mbar	**OR** Gas inlet pressure	mbar
Central heating flow temperature			°C
Central heating return temperature			°C

COMBINATION BOILERS ONLY			
Is the installation in a hard water area (above 200ppm)?	Yes		No
If yes, and if required by the manufacturer, has a water scale reducer been fitted?	Yes		No
What type of scale reducer has been fitted?			
DOMESTIC HOT WATER MODE Measure and Record:			
Gas rate	m^3/hr	**OR**	ft^3/hr
Burner operating pressure (at maximum rate)	mbar	**OR** Gas inlet pressure at maximum rate	mbar
Cold water inlet temperature			°C
Hot water has been checked at all outlets	Yes	Temperature	°C
Water flow rate			l/min

CONDENSING BOILERS ONLY	
The condensate drain has been installed in accordance with the manufacturer's instructions and/or BS5546/BS6798	Yes

ALL INSTALLATIONS						
Record the following:	At max. rate:	CO	ppm	**AND**	CO/CO_2	Ratio
	At min. rate: (where possible)	CO	ppm	**AND**	CO/CO_2	Ratio
The heating and hot water system complies with the appropriate Building Regulations						Yes
The boiler and associated products have been installed and commissioned in accordance with the manufacturer's instructions						Yes
The operation of the boiler and system controls have been demonstrated to and understood by the customer						Yes
The manufacturer's literature, including Benchmark Checklist and Service Record, has been explained and left with the customer						Yes

Commissioning Engineer's Signature
Customer's Signature
(To confirm satisfactory demonstration and receipt of manufacturer's literature)

*All installations in England and Wales must be notified to Local Authority Building Control (LABC) either directly or through a Competent Persons Scheme. A Building Regulations Compliance Certificate will then be issued to the customer.

benchmark COLLECTIVE MARK
THE MARK OF QUALITY FOR THE INSTALLATION, COMMISSIONING AND SERVICING OF DOMESTIC HEATING AND HOT WATER SYSTEMS

© Heating and Hotwater Industry Council (HHIC)

SERVICE RECORD

It is recommended that your heating system is serviced regularly and that the appropriate Service Interval Record is completed.

Service Provider

Before completing the appropriate Service Record below, please ensure you have carried out the service as described in the manufacturer's instructions. Always use the manufacturer's specified spare part when replacing controls.

SERVICE 01					Date:
Engineer name:					
Company name:					
Telephone No:					
Gas safe register No:					
Record:	At max. rate:	CO ppm	**AND**	CO_2 %	
	At min. rate: (Where Possible)	CO ppm	**AND**	CO_2 %	
Comments:					
Signature					

SERVICE 02					Date:
Engineer name:					
Company name:					
Telephone No:					
Gas safe register No:					
Record:	At max. rate:	CO ppm	**AND**	CO_2 %	
	At min. rate: (Where Possible)	CO ppm	**AND**	CO_2 %	
Comments:					
Signature					

SERVICE 03					Date:
Engineer name:					
Company name:					
Telephone No:					
Gas safe register No:					
Record:	At max. rate:	CO ppm	**AND**	CO_2 %	
	At min. rate: (Where Possible)	CO ppm	**AND**	CO_2 %	
Comments:					
Signature					

SERVICE 04					Date:
Engineer name:					
Company name:					
Telephone No:					
Gas safe register No:					
Record:	At max. rate:	CO ppm	**AND**	CO_2 %	
	At min. rate: (Where Possible)	CO ppm	**AND**	CO_2 %	
Comments:					
Signature					

SERVICE 05					Date:
Engineer name:					
Company name:					
Telephone No:					
Gas safe register No:					
Record:	At max. rate:	CO ppm	**AND**	CO_2 %	
	At min. rate: (Where Possible)	CO ppm	**AND**	CO_2 %	
Comments:					
Signature					

SERVICE 06					Date:
Engineer name:					
Company name:					
Telephone No:					
Gas safe register No:					
Record:	At max. rate:	CO ppm	**AND**	CO_2 %	
	At min. rate: (Where Possible)	CO ppm	**AND**	CO_2 %	
Comments:					
Signature					

SERVICE 07					Date:
Engineer name:					
Company name:					
Telephone No:					
Gas safe register No:					
Record:	At max. rate:	CO ppm	**AND**	CO_2 %	
	At min. rate: (Where Possible)	CO ppm	**AND**	CO_2 %	
Comments:					
Signature					

SERVICE 08					Date:
Engineer name:					
Company name:					
Telephone No:					
Gas safe register No:					
Record:	At max. rate:	CO ppm	**AND**	CO_2 %	
	At min. rate: (Where Possible)	CO ppm	**AND**	CO_2 %	
Comments:					
Signature					

SERVICE 09					Date:
Engineer name:					
Company name:					
Telephone No:					
Gas safe register No:					
Record:	At max. rate:	CO ppm	**AND**	CO_2 %	
	At min. rate: (Where Possible)	CO ppm	**AND**	CO_2 %	
Comments:					
Signature					

SERVICE 10					Date:
Engineer name:					
Company name:					
Telephone No:					
Gas safe register No:					
Record:	At max. rate:	CO ppm	**AND**	CO_2 %	
	At min. rate: (Where Possible)	CO ppm	**AND**	CO_2 %	
Comments:					
Signature					

*All installations in England and Wales must be notified to Local Authority Building Control (LABC) either directly or through a Competent Persons Scheme. A Building Regulations Compliance Certificate will then be issued to the customer.

benchmark COLLECTIVE MARK
THE MARK OF QUALITY FOR THE INSTALLATION, COMMISSIONING AND SERVICING OF DOMESTIC HEATING AND HOT WATER SYSTEMS

© Heating and Hotwater Industry Council (HHIC)

WORCESTER, BOSCH GROUP:

TECHNICAL SUPPORT:	0330 123 3366
APPOINTMENTS:	0330 123 9339
SPARES:	0330 123 9779
LITERATURE:	0330 123 9119
TRAINING:	0330 123 0166
SALES:	0330 123 9669

Worcester, Bosch Group
Cotswold Way, Warndon, Worcester WR4 9SW.
Tel. 0330 123 9559
Worcester, Bosch Group is a brand name of Bosch Thermotechnology Ltd.
worcester-bosch.co.uk

6 720 813 283 (2014/09)

WORCESTER
Bosch Group